PAGE	DESCRIPTION	NOTE
1	P01_Title	
2	P02_Structure chart	
3	P03_Connect	
4	P04_UART	
5	P05_RS485	
6	P06_EP&RTC	
7	P07_DpLED	
8	P08_LED&KEY	
9	P09_TFCARD	
10	P10_HDMI_O	
11	P11_ETHA	
12	P12_ETHB	
13	P13_GT_CLK	
14	P14_SFPX2	
15	P15_PCIE	
16	P16_CEP	
17	P17_FEP	
18	P18_POWER	
19	P19_AUDIO	
20		
21		
22		
23		
24		

米联客 MILIANKE			
www.uisrc.com			F9P
ProjectName: F9P			
Size: A	Page Title: P02 Structure chart	Rev:	
Date: Friday, March 13, 2026	Sheet 2 of 19		

连接器：底板J1_A1对应核心板J1连接器的A1管脚
底板J2_A1对应核心板J2连接器的A1管脚

BANK11：
未用

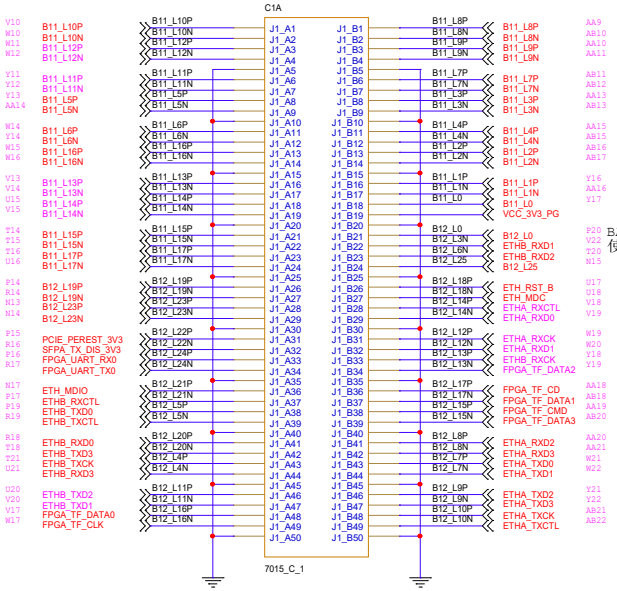

BANK12_L3_P管脚
使用BANK12_L6_N管脚

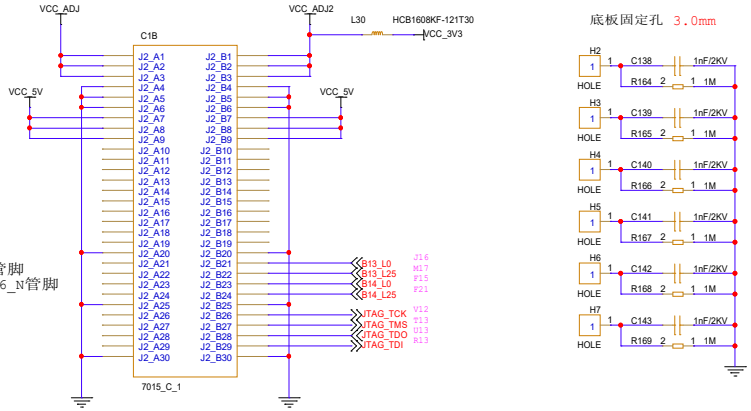

底板固定孔 3.0mm

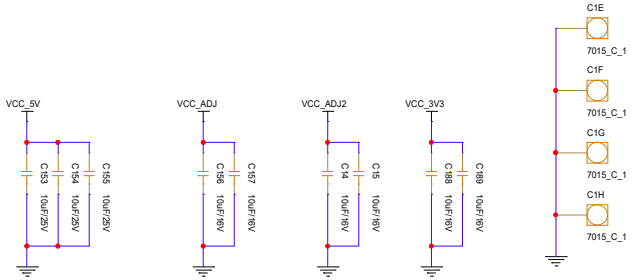

BANK94：
SFP、PCIE

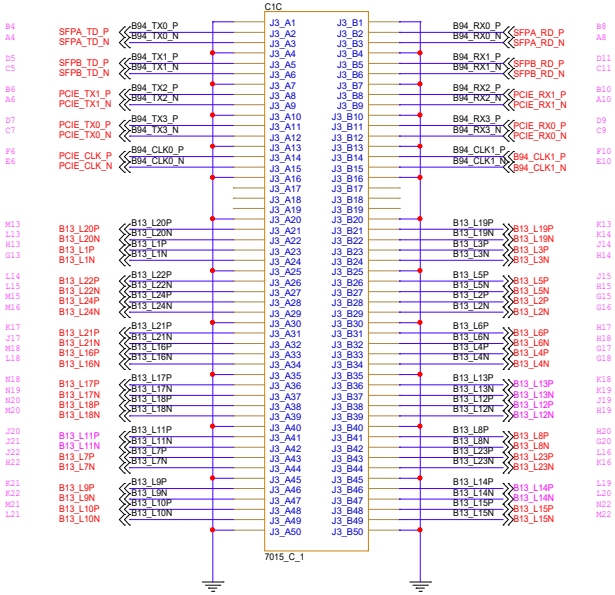

BANK13：FEP

BANK14：
HDMIOUT、CEP（复用）

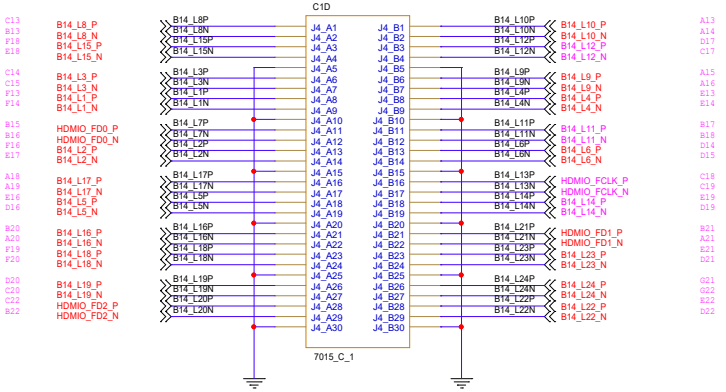

米联客 MILIANKE
www.uisrc.com F9P

ProjectName:	F9P		
Size: C	Page Title: P03 Connect	Rev:	
Date: Thursday, May 14, 2026	Sheet 3 of 19		

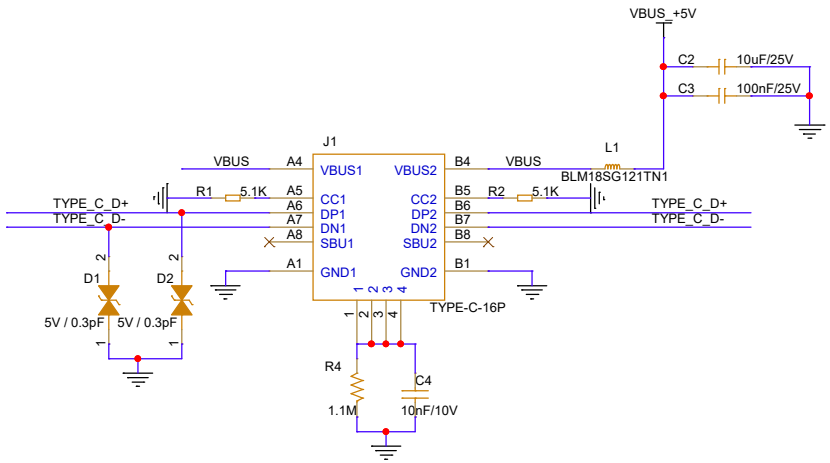

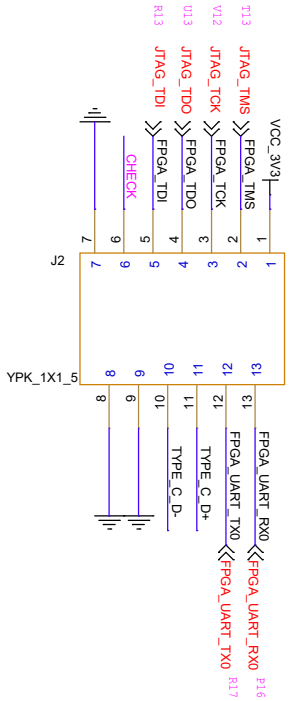

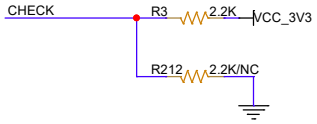

主芯片是安路，CHECK脚上拉，R3焊接
主芯片是A7，CHECK脚下拉，R212焊接

米联客 MILIANKE			
www.uisrc.com			F9P
ProjectName: F9P			
Size: B	Page Title: P04_UART		Rev:
Date: Wednesday, April 29, 2026		Sheet 4 of 19	

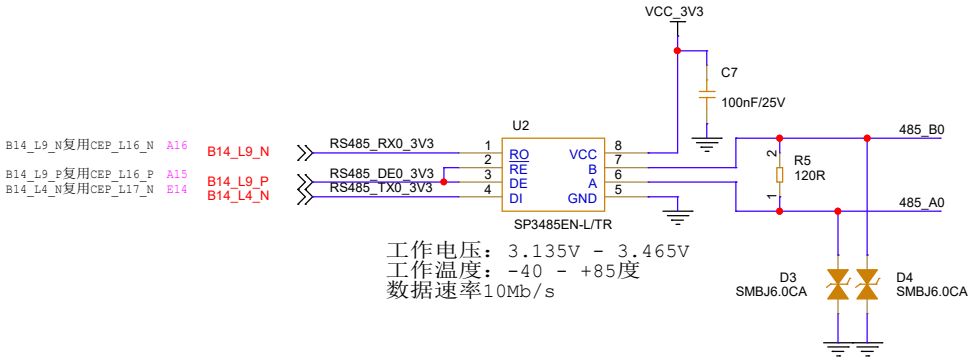

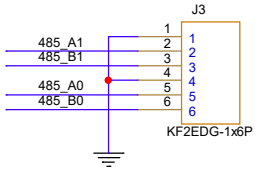

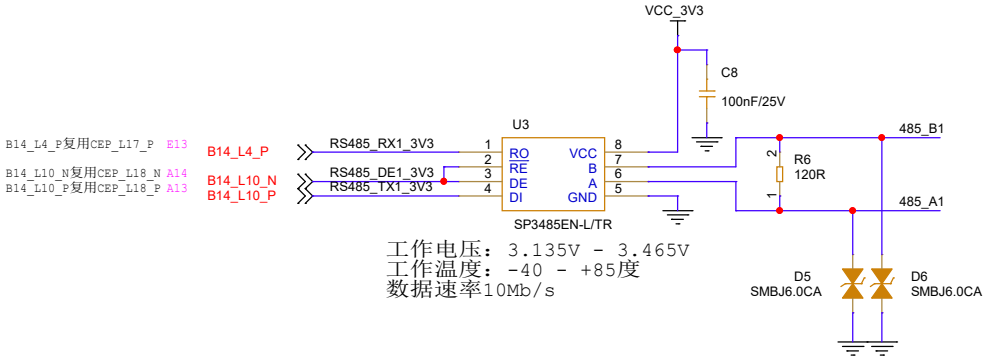

米联客 MILIANKE

www.uisrc.com F9P

ProjectName: F9P			
Size: B	Page Title: P05_RS485	Rev:	
Date: Friday, March 20, 2026	Sheet 5 of 19		

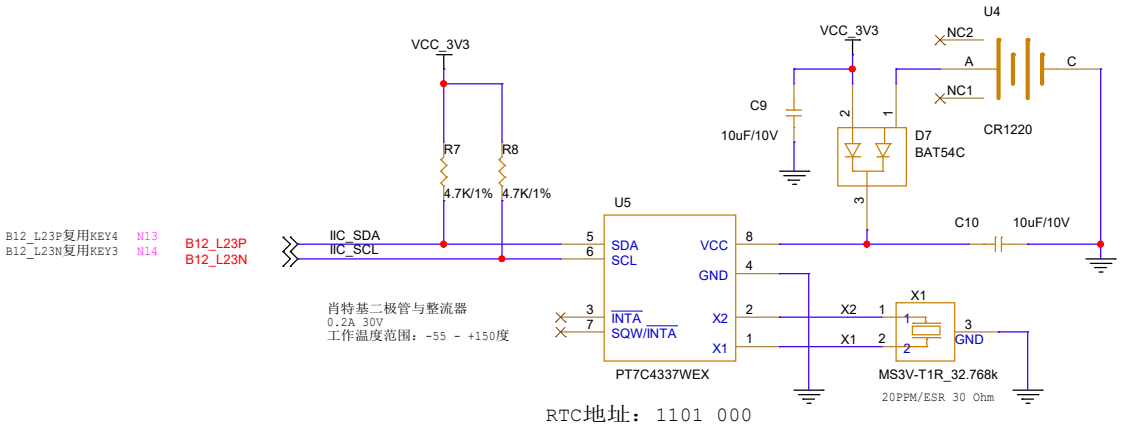

RTC地址：1101 000

RTC时钟
工作温度范围：-40 - +85度
电源电压： 1.8V - 5.5V

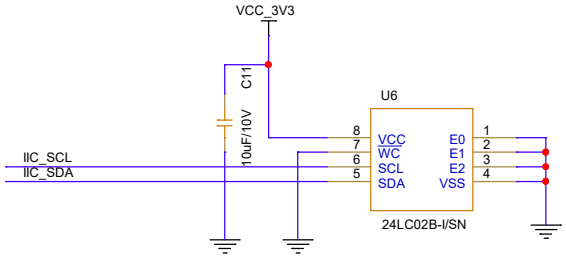

EPPROM地址：1010 000

米联客 MILIANKE		
www.uisrc.com		F9P
ProjectName: F9P		
Size: B	Page Title: P06_EP&RTC	Rev:
Date: Wednesday, March 18, 2026	Sheet 6 of 19	

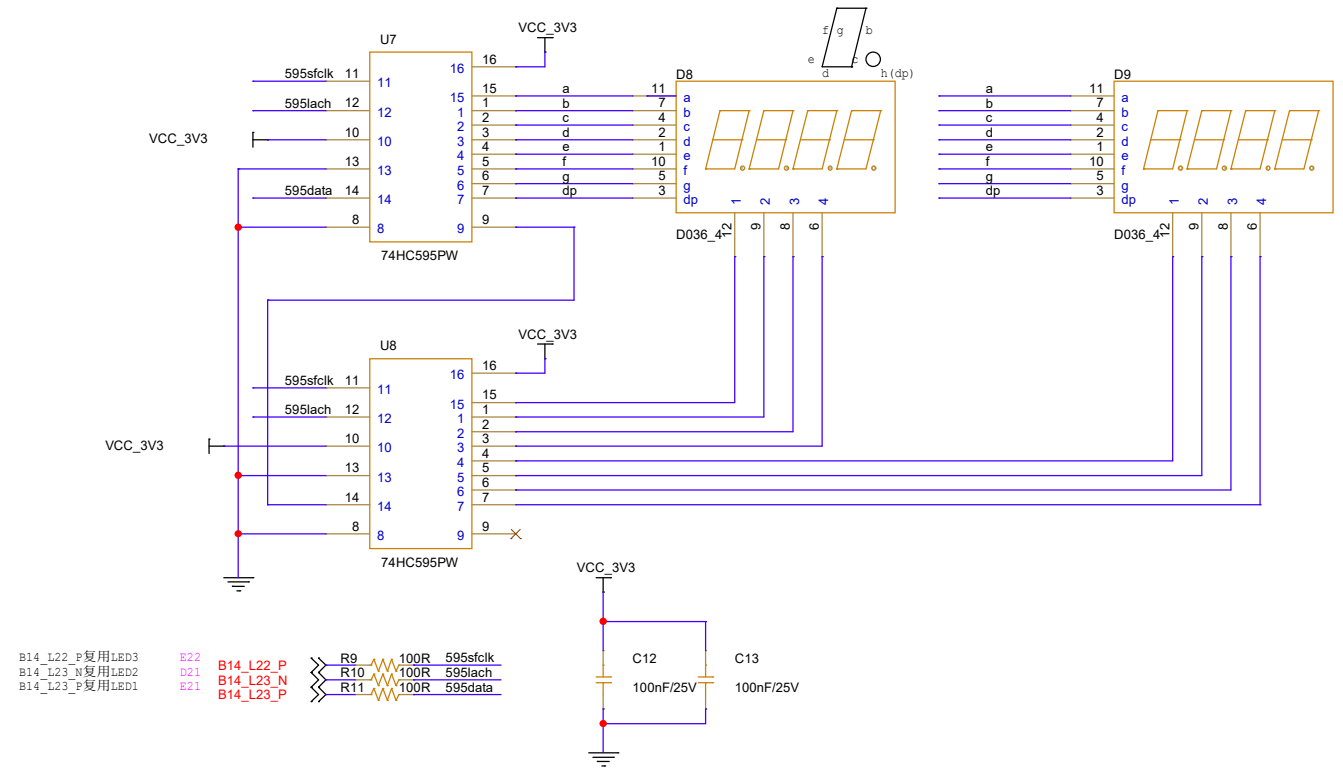

米联客	MILIANKE	
www.uisrc.com		F9P
ProjectName: F9P		
Size: B	Page Title: P07_DpLED	Rev:
Date: Wednesday, March 25, 2026	Sheet 7 of 19	



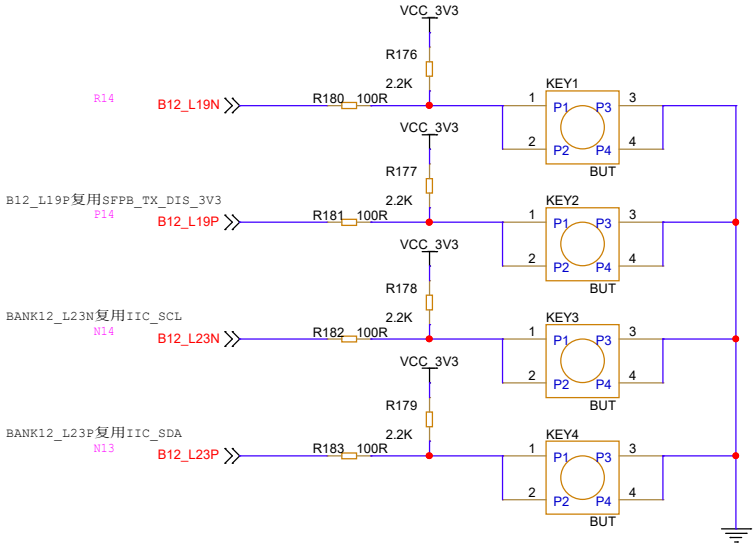

米联客 MILIANKE

www.uisrc.com F9P

ProjectName: F9P			
Size: B	Page Title: P08_LED&KEY	Rev:	
Date: Friday, April 10, 2026	Sheet 8 of 19		

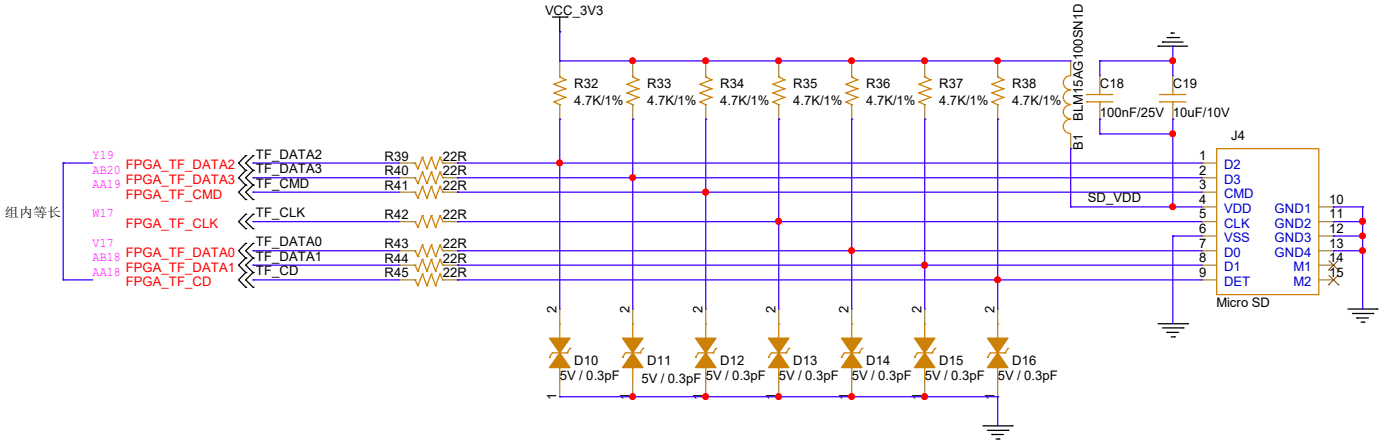

米联客 MILIANKE

www.uisrc.com F9P

ProjectName: F9P			
Size: B	Page Title: P09_TFCARD	Rev:	
Date: Wednesday, March 18, 2026	Sheet 9 of 19		

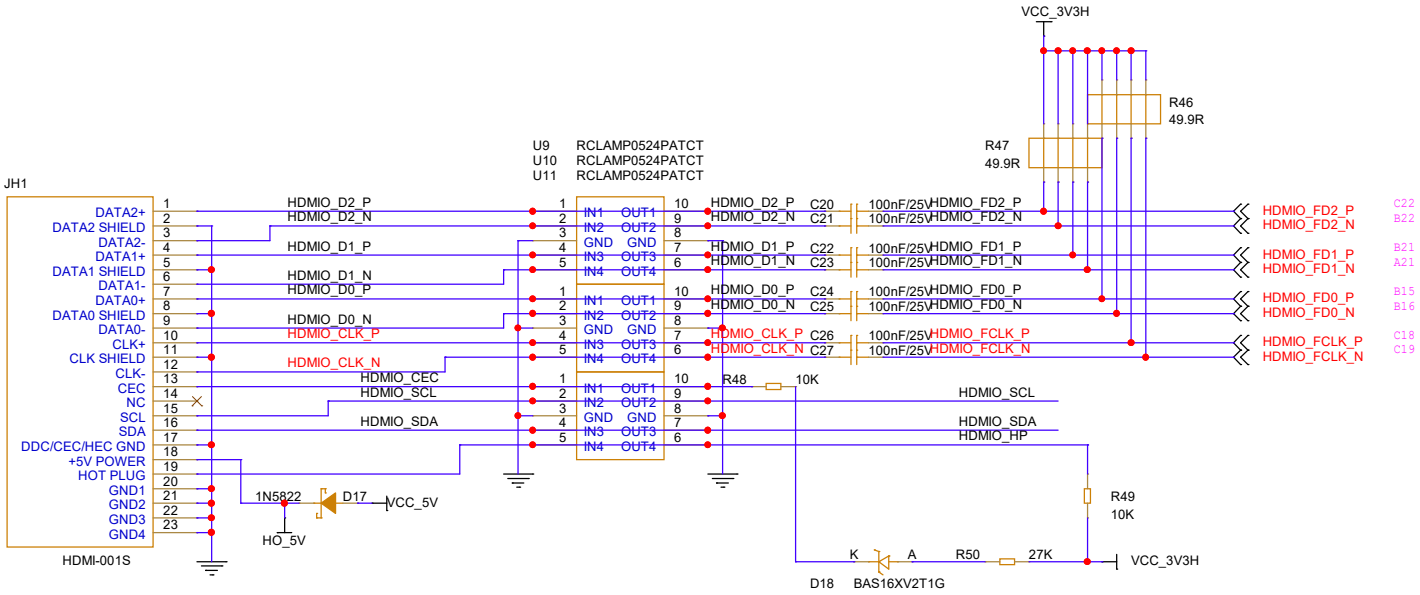

全部等长
对内等长

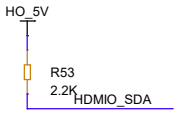

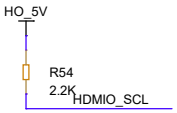

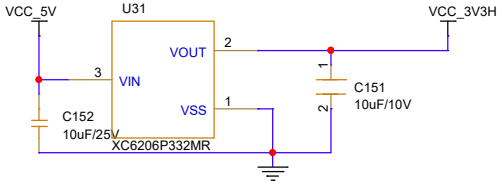

品牌：HXY MOSFET(华轩阳电子)
最大输入电压：8V
输出电压：3.3V
最大输出电流：300mA

米联客	MILIANKE	
www.uisrc.com		F9P
ProjectName: F9P		
Size: B	Page Title: P10_HDMI_O	Rev:
Date: Wednesday, March 25, 2026	Sheet 10 of 19	

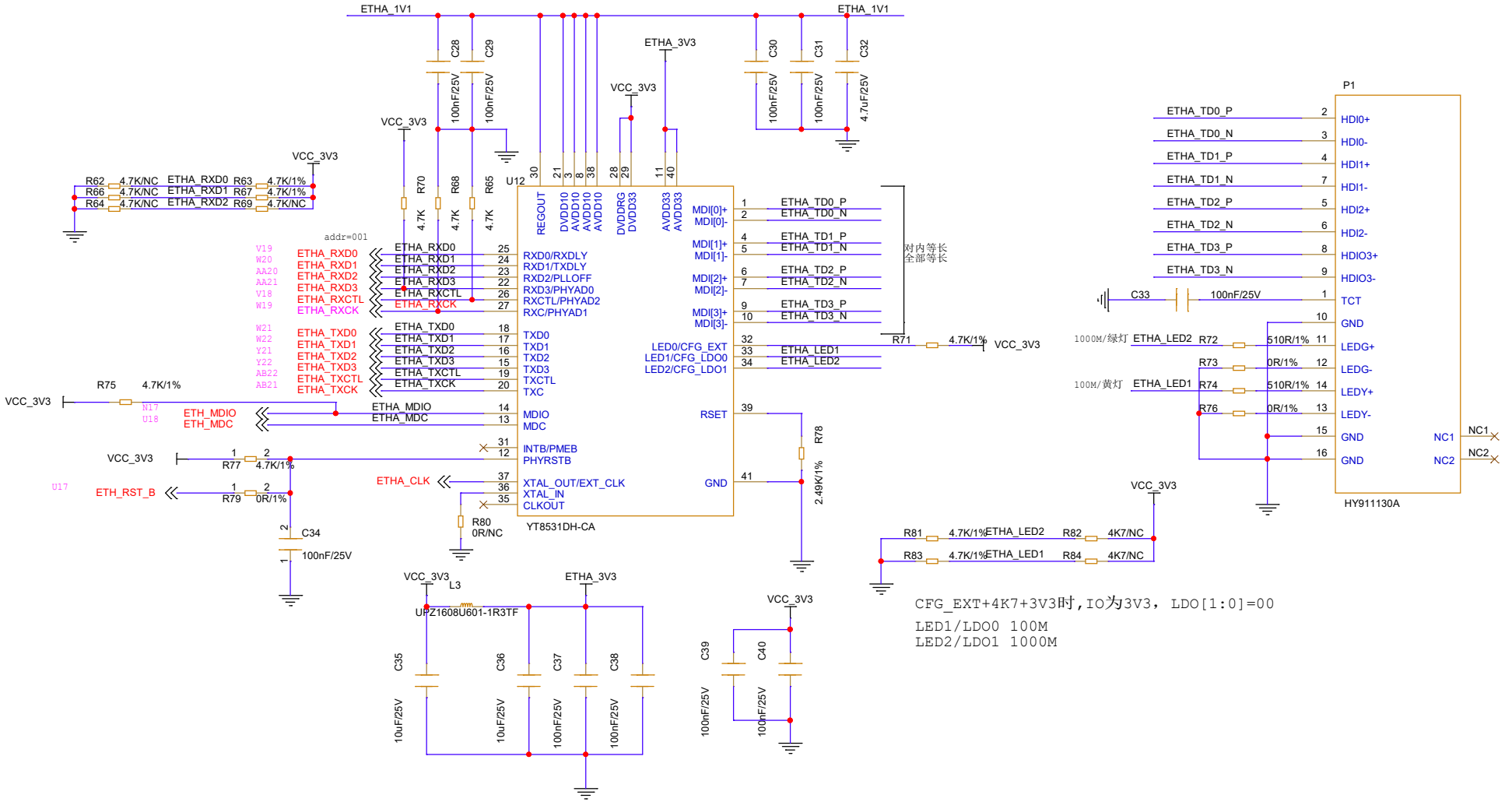

工作电源电压：1.65V - 5.5V
工作温度范围：-40 - +125度

米联客	MILIANKE	
www.uisrc.com		F9P
ProjectName: F9P		
Size: B	Page Title: P11 ETHA	Rev:
Date: Tuesday, March 31, 2026	Sheet 11 of 19	

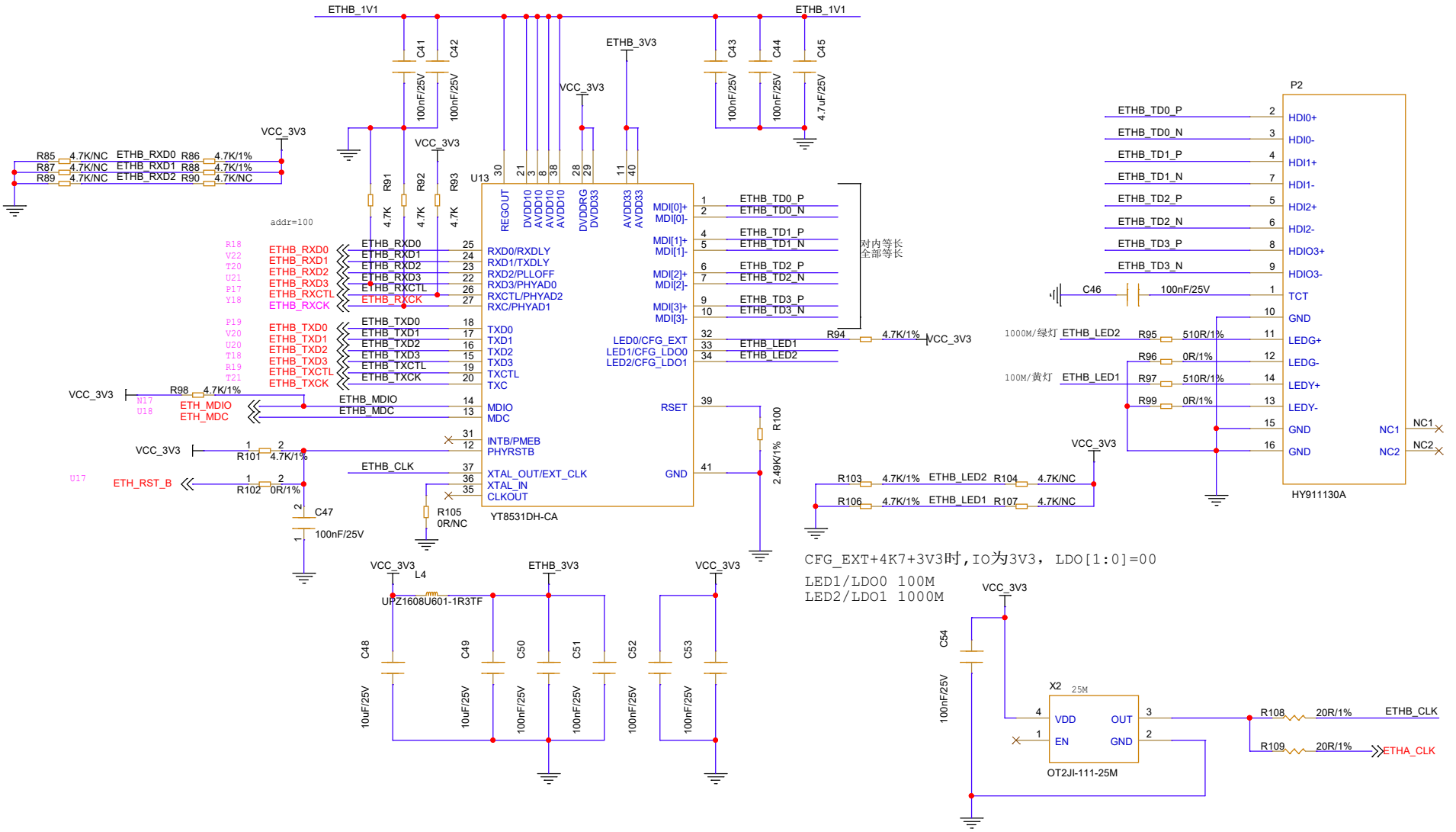

米联客 MILIANKE			
www.uisrc.com		F9P	
ProjectName: F9P			
Size: B	Page Title: P12 ETHB	Rev:	
Date: Tuesday, March 31, 2026	Sheet 12 of 19		

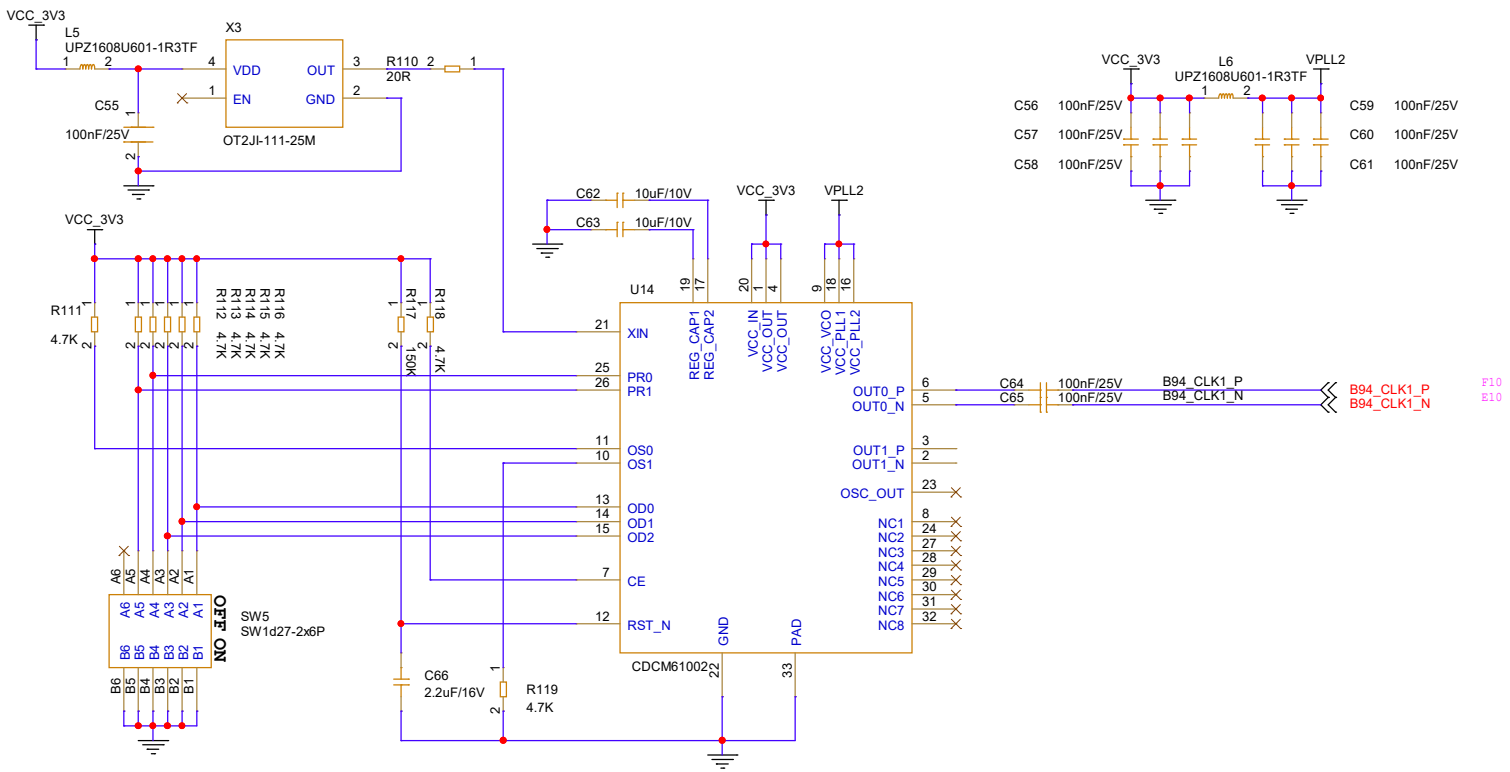

Prescale Divider	Feedback Divider	PR1/PR0	VCO MHZ	Output Divider	OD2/OD1 /OD0	Output MHZ	Application
4	20	11	2000	8	111	62.5	GigE
3	24	00	1800	8	111	75	SATA
3	24	00	1800	6	101	100	PCIE
4	20	11	2000	4	011	125	Gige
3	24	00	1800	4	011	150	SATA
3	25	10	1875	4	011	156.25	10GigE
5	15	01	1875	2	001	187.5	12GigE
3	24	00	1800	3	010	200	PCIE
4	20	11	2000	2	001	250	GigE
3	25	10	1875	2	001	312.5	XGMII
3	25	10	1875	1	000	625	10GigE

米联客 MILIANKE

www.uisrc.com F9P

ProjectName: F9P			
Size: B	Page Title: P13_GT_CLK	Rev:	
Date: Friday, March 13, 2026	Sheet 13 of 19		

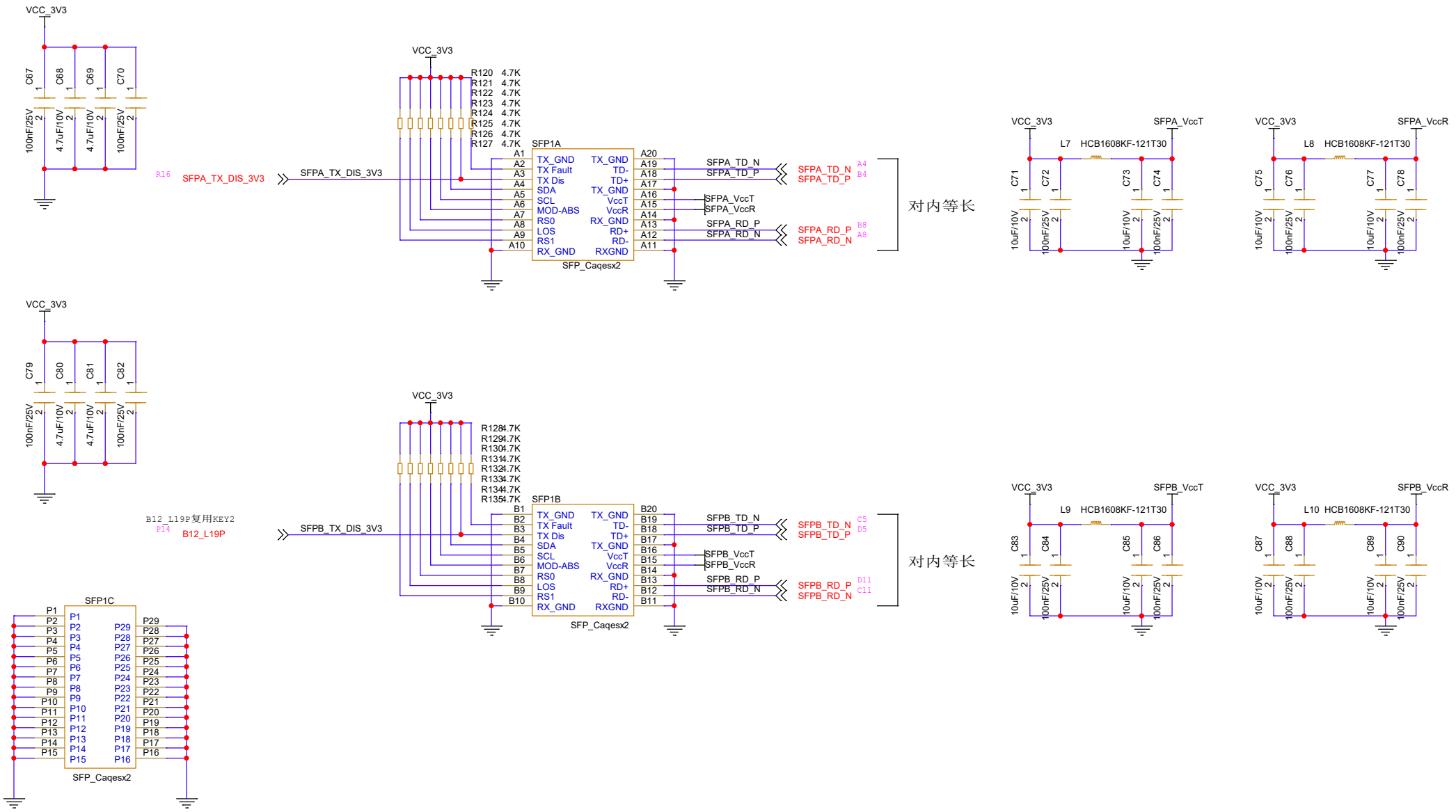

米联客	MILIANKE	
www.uisrc.com		F9P
ProjectName: F9P		
Size: B	Page Title: P14_SFPX2	Rev:
Date: Wednesday, March 18, 2026	Sheet 14 of 19	

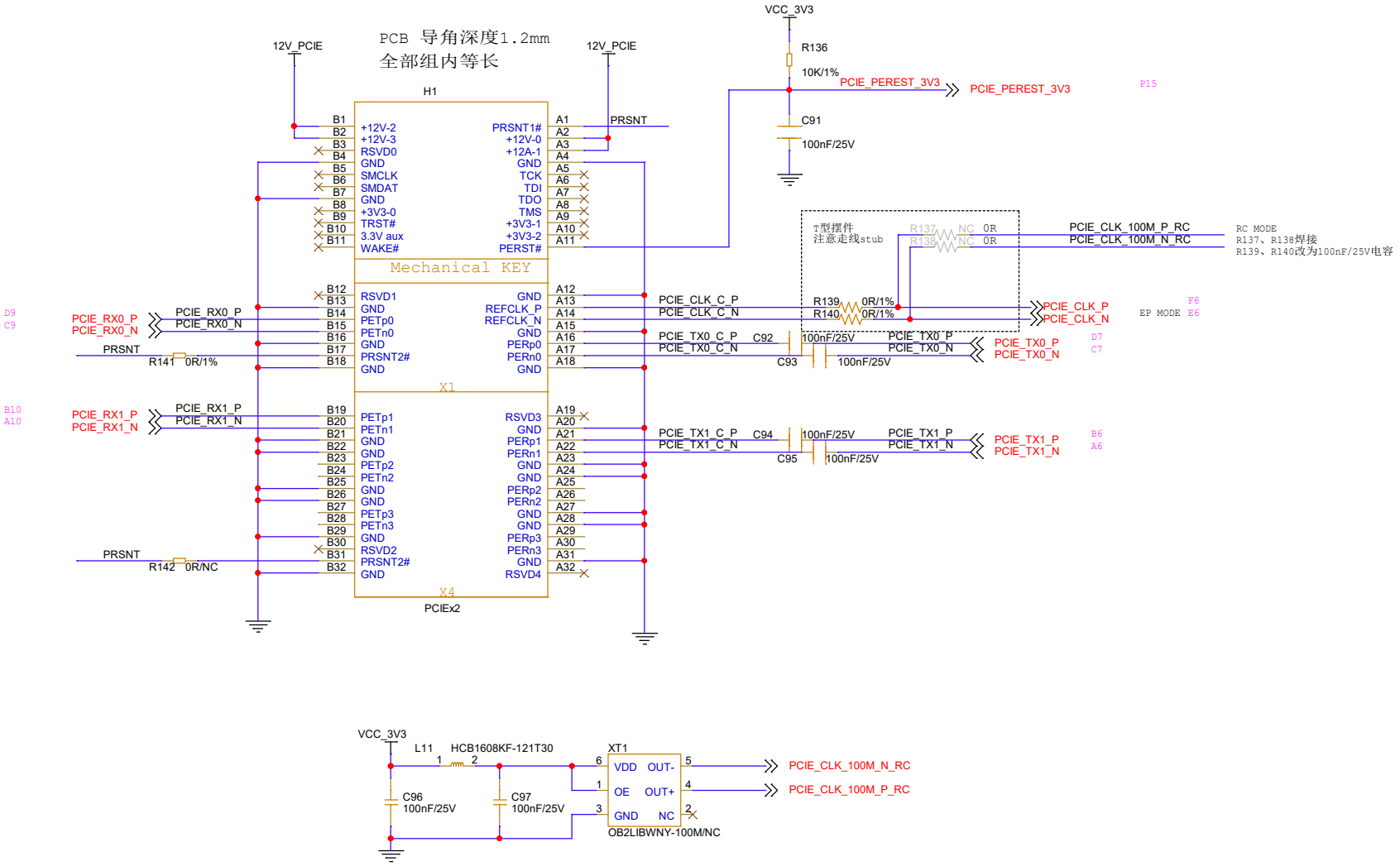

米联客 MILIANKE		
www.uisrc.com		F9P
ProjectName: F9P		
Size: B	Page Title: P15_PCIE	Rev:
Date: Friday, May 08, 2026	Sheet 15 of 19	

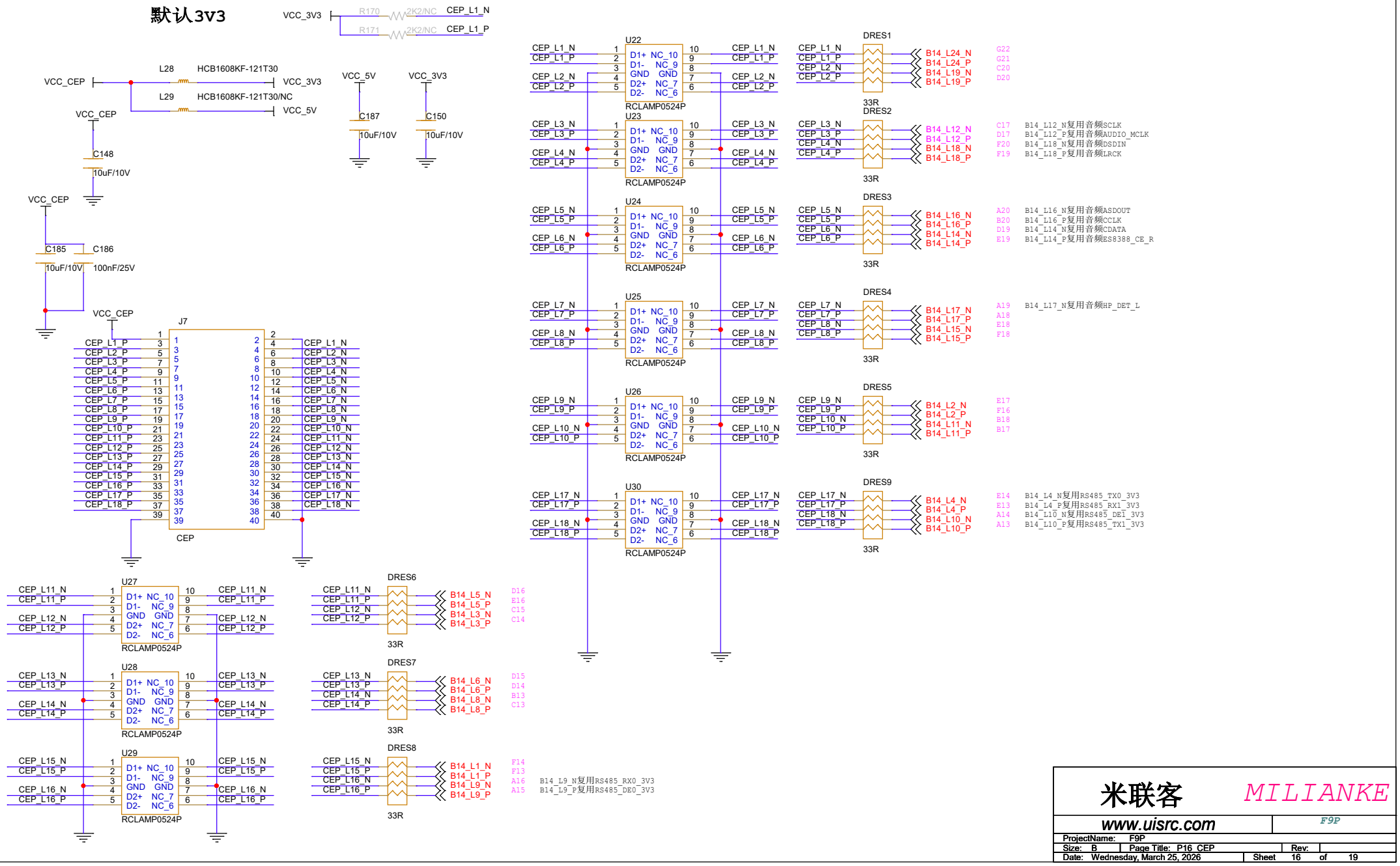

米联客 MILIANKE

www.uisrc.com F9P

ProjectName: F9P			
Size: B	Page Title: P16_CEP	Rev:	
Date: Wednesday, March 25, 2026	Sheet 16 of 19		

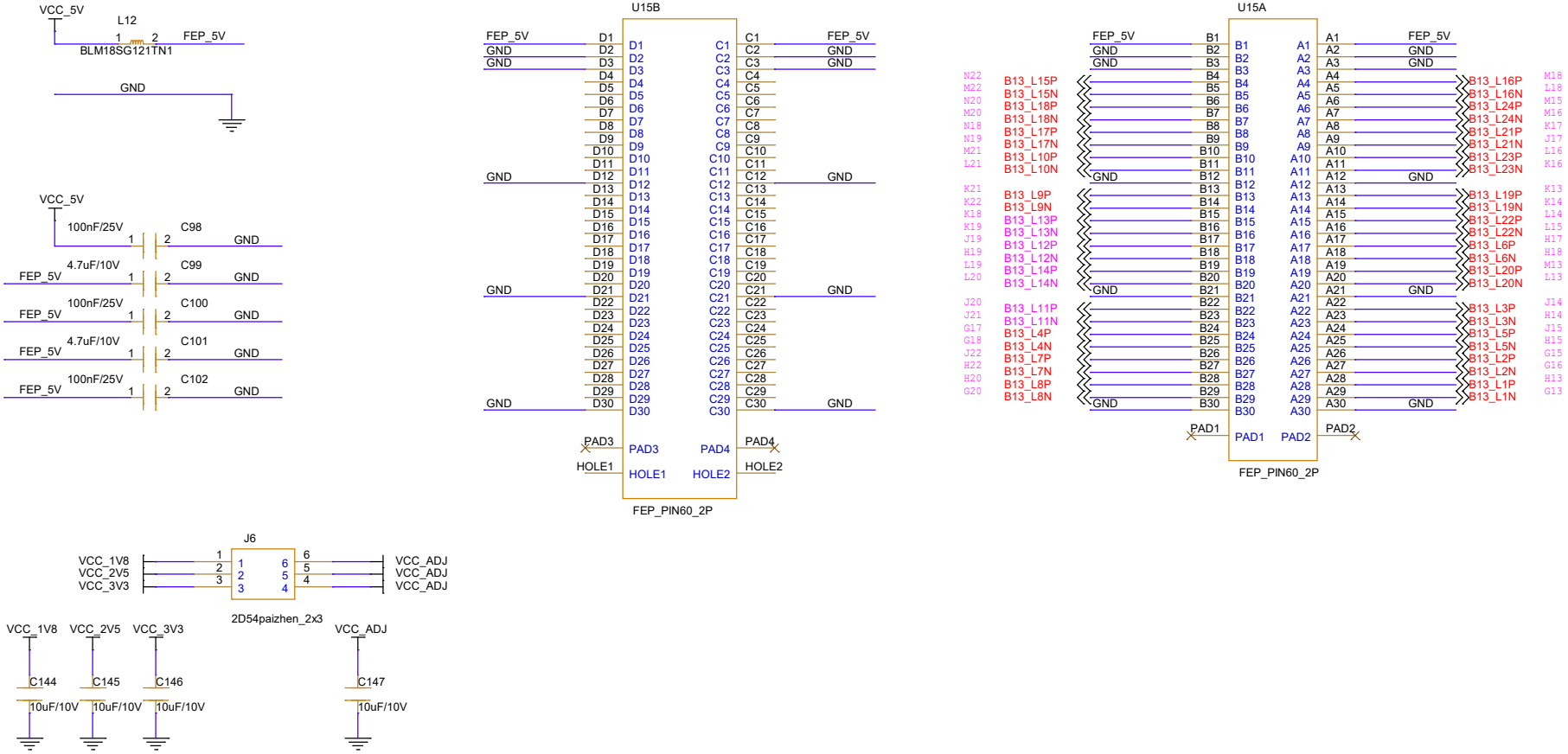

米联客	MILIANKE
www.uisrc.com	F9P
ProjectName: F9P	
Size: B	Page Title: P17_FEP Rev:
Date: Monday, April 27, 2026	Sheet 17 of 19

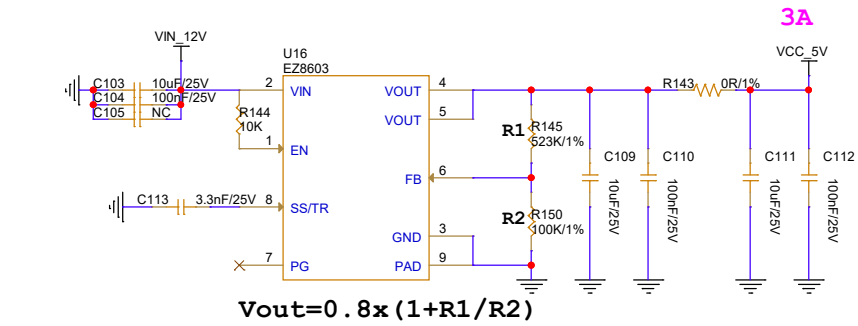

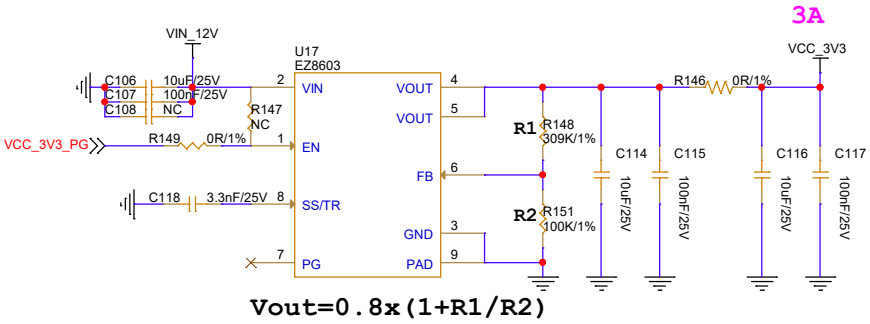

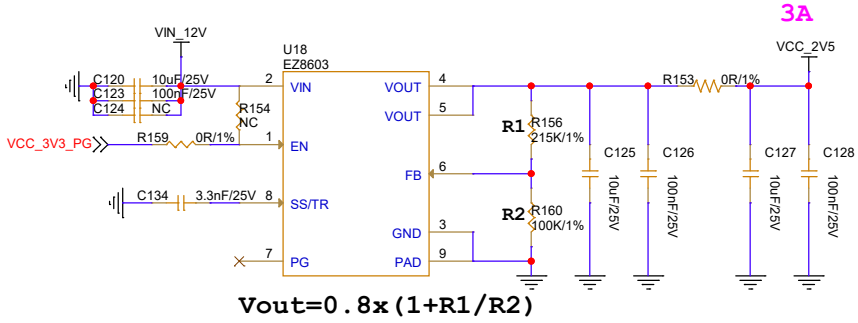

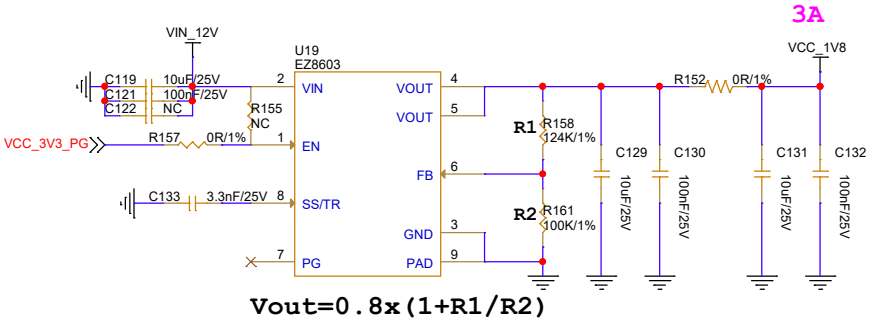

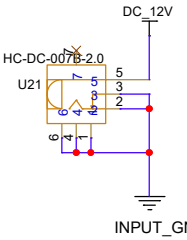

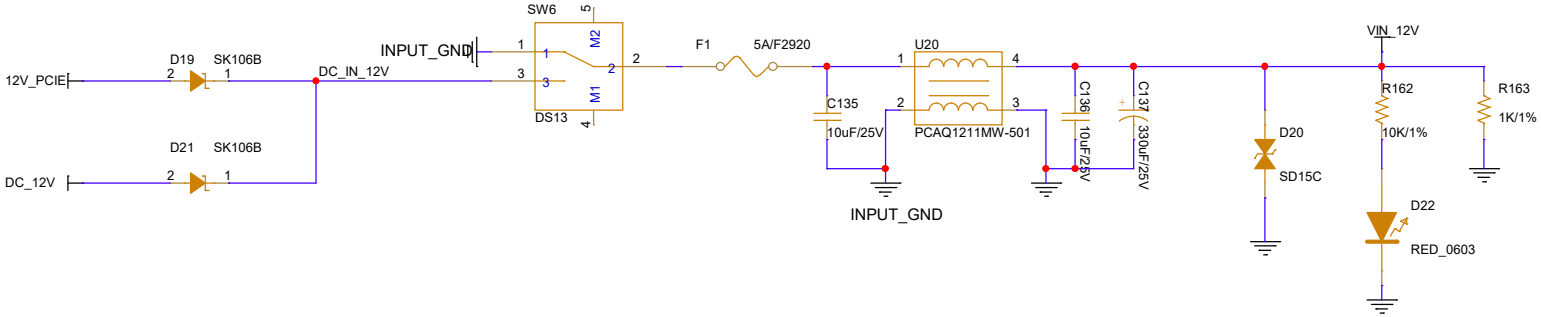

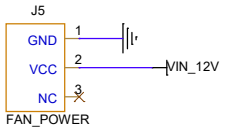

米联客 MILIANKE

www.uisrc.com F9P

ProjectName: F9P			
Size: B	Page Title: P18_POWER		Rev:
Date: Wednesday, March 25, 2026		Sheet 18 of 19	

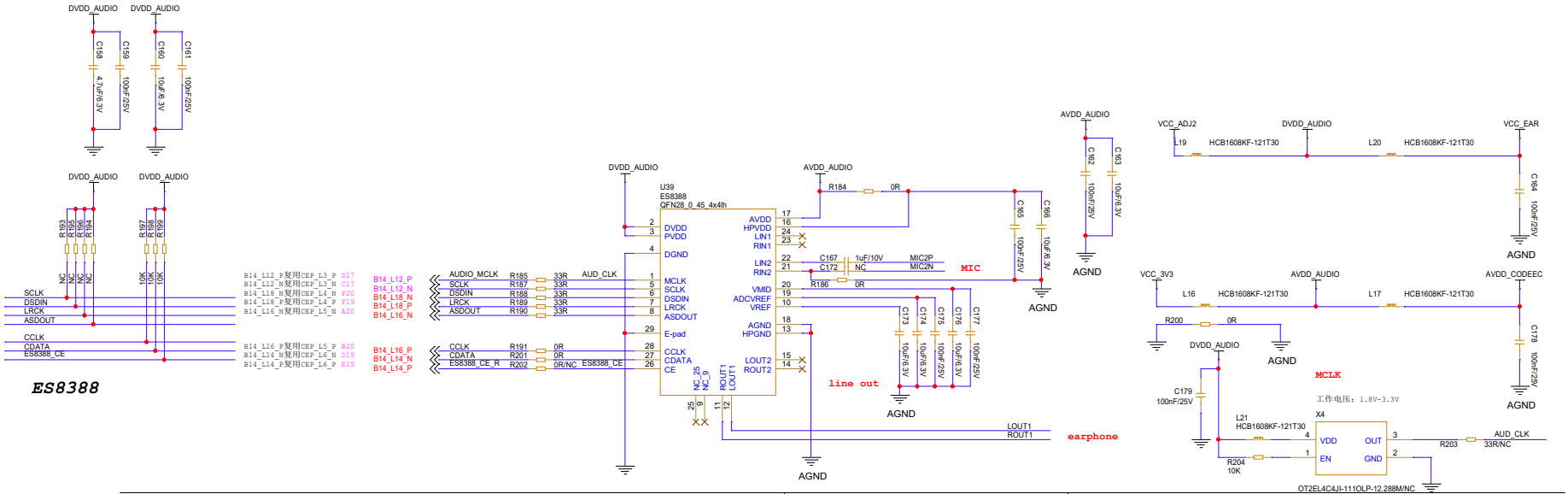

PIN	FUNCTION
1	sleeve
3	ring
11	ring switch
10	tip switch
2	tip

米联客 MILIANKE

www.uisrc.com F9P

ProjectName: F9P			
Size: C	Page Title: P19_AUDIO	Rev:	
Date: Wednesday, March 25, 2026	Sheet 19 of 19		