PAGE	DESCRIPTION	NOTE
1	P01_TItle	
2	P02_Block	
3	P03_connect	
4	P04_Power	
5	P05_QSPI&JTAG	
6	P06_PS_ETH	
7	P07_PL_ETHA	
8	P08_PS_UART&PL_UART	
9	P09_PS_USB	
10	P10_HDMIOUT	
11	P11_SFPX2	
12	P12_PCIE	
13	P13_FEP	
14	P14_CEP	
15	P15_EP&RTC	
16	P16_LED&KEY	
17	P17_TF	
18	P18_CAN&RS485	
19	P19_GTX_CLK	
20	P20_M2_M	
21		
22		

米联客 MiLianKe

www.milianke.com MLK-F29

ProjectName: <Doc>

Size: A | Page Title: 01_TItle | Rev: 20241205

Date: Wednesday, January 22, 2025 | Sheet 1 of 20

SFP+×2
10.3125Gbps

GTX 时钟芯片
拨码开关

PICE2.0×2
速率5.0Gbpsx2Lane

核心板CZ10/11
7035/7045/7030

模式开关

按键×4

M2_M高速扩展接口
一组高速MGT111和10GPIO/5对差分

JTAG接口

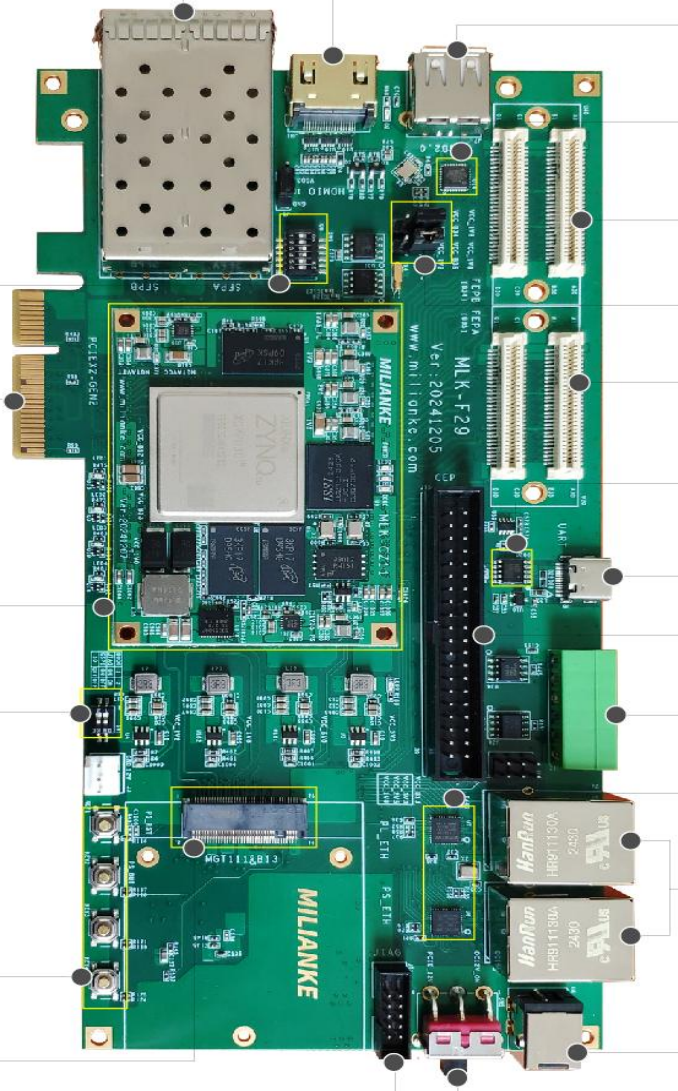

HDMI输出
1080@60fps

USB 2.0
支持HOST与OTG模式

USB3320芯片

FEP高速扩展接口
96 GPIO/48对差分

ADJ电压跳线帽
1.2V/1.8V

FEP高速扩展接口
96GPIO/48对差分

CH342K
USB转串口芯片

UART

CEP接口
38 GPIO / 19对差分

CAN/RS485

网口芯片
YT8531DH-CA

千兆网口
支持10/100/1000 Mbit/s

电源DC-12V

电源开关

米联客 MiLianKe

www.milianke.com | MLK-F29

ProjectName: <Doc>			
Size: B	Page Title: P02_Block	Rev:	20241205
Date: Friday, January 24, 2025	Sheet 2 of 20		

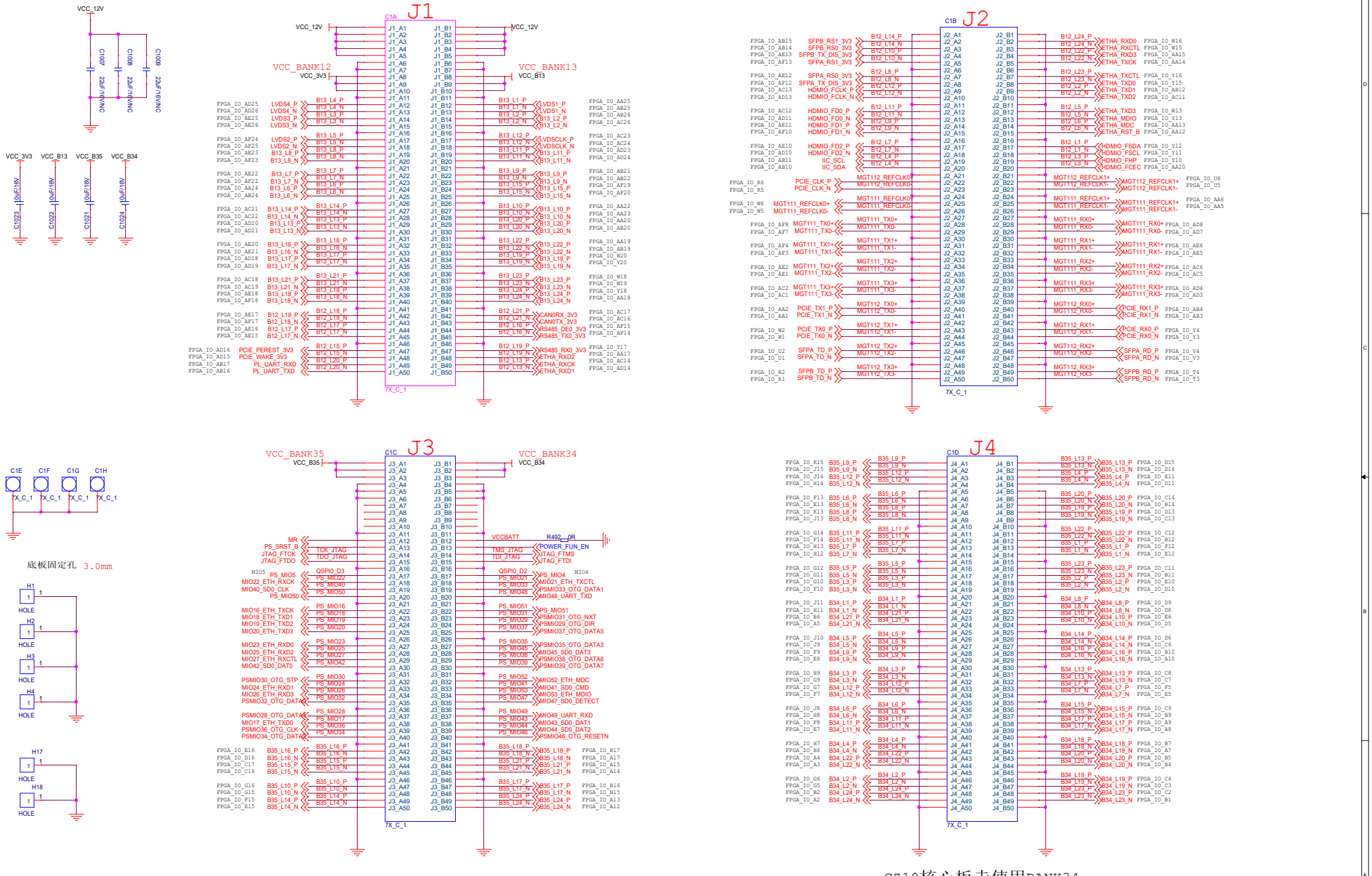

米联客 MiLianKe
www.milianke.com
MLK-F29
ProjectName: <Doc>
Size: C | Page Title: P03_connect | Rev: | 20241205
Date: Wednesday, January 22, 2025 | Sheet 3 of 20

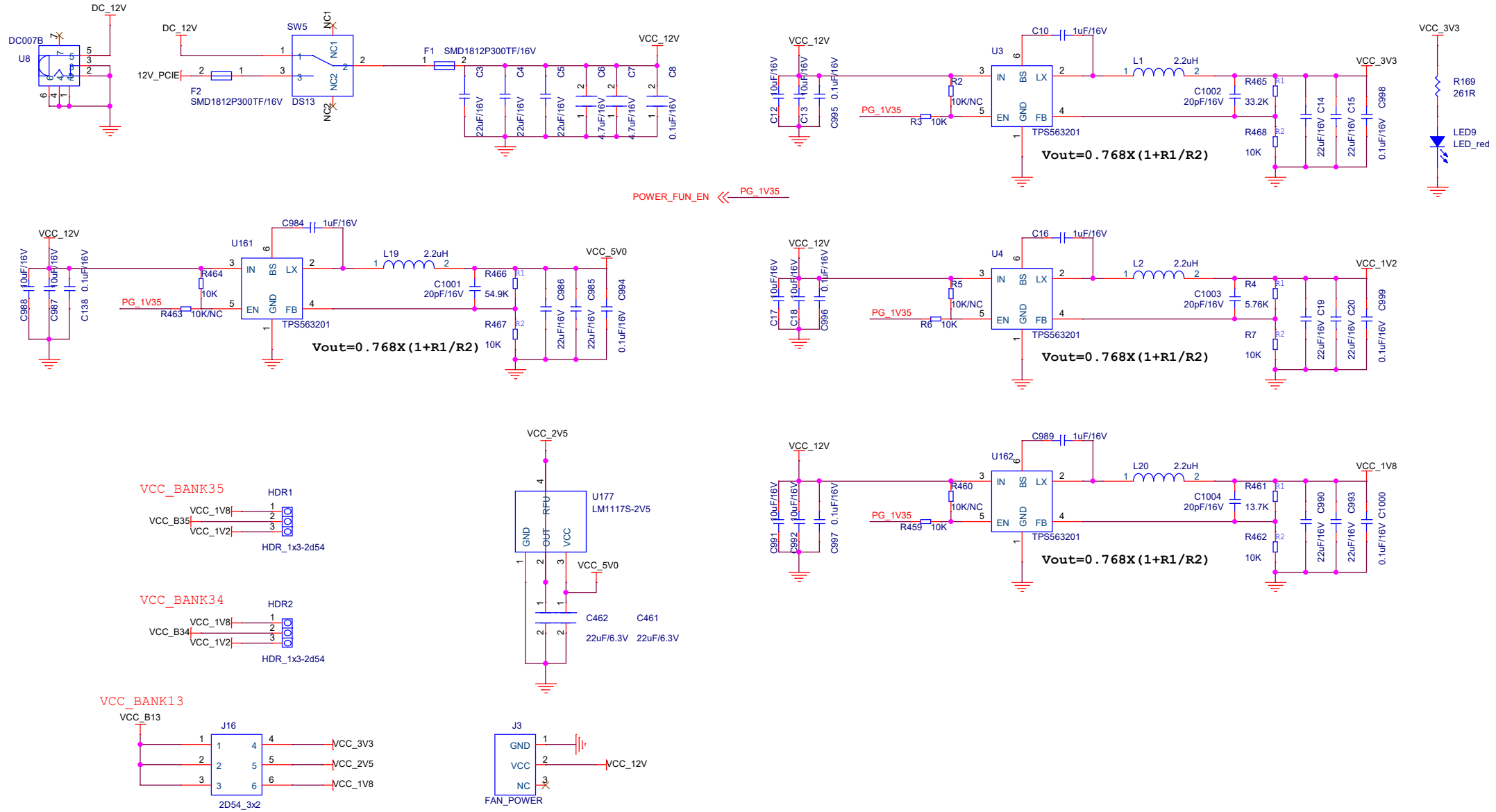

米联客 MiLianKe		
www.milianke.com		MLK-F29
ProjectName: <Doc>		
Size: B	Page Title: P04_Power	Rev: 20241205
Date: Wednesday, January 22, 2025	Sheet 4 of 20	

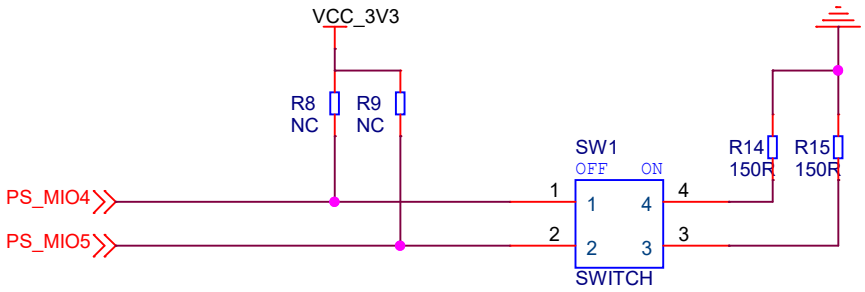

Boot	SW1/MIO4	SW2/MIO5
JTAG	ON/0	ON/0
QSPI	ON/0	OFF/1
SD_CARD	OFF/1	OFF/1

拨码开关至ON为低电平信号0

拨码开关至OFF为高电平信号1

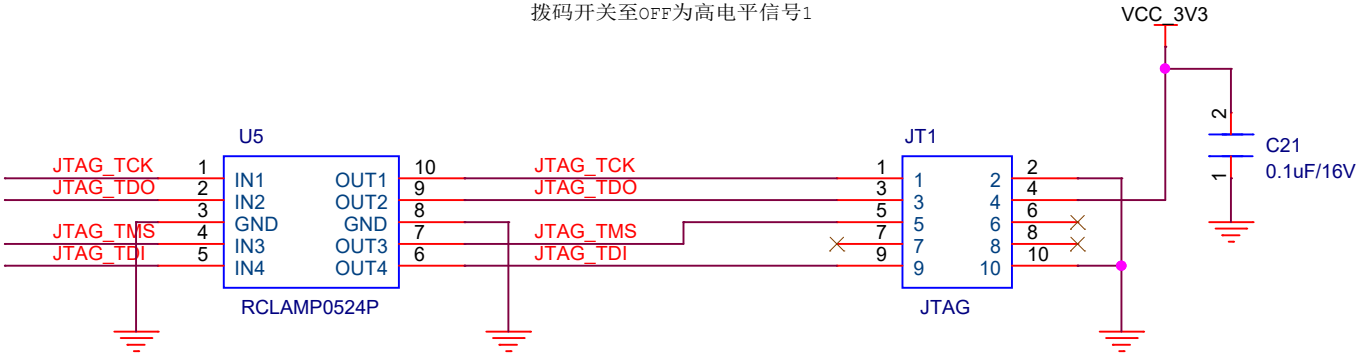

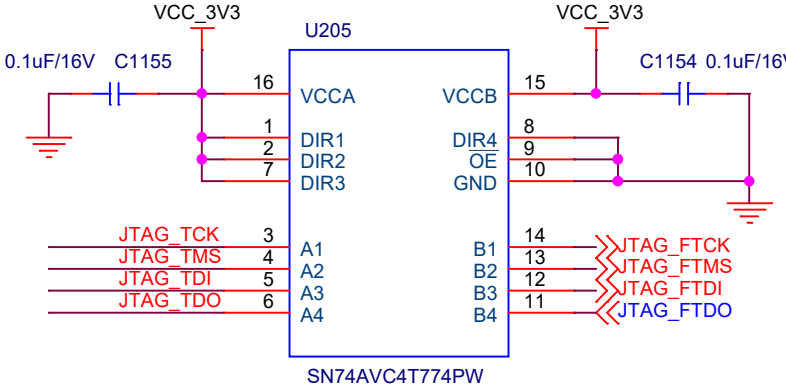

米联客 MiLianKe

www.milianke.com MLK-F29

ProjectName: <Doc>			
Size: A	Page Title: P05_QSPI&JTAG	Rev:	20241205
Date: Wednesday, January 22, 2025	Sheet 5 of 20		

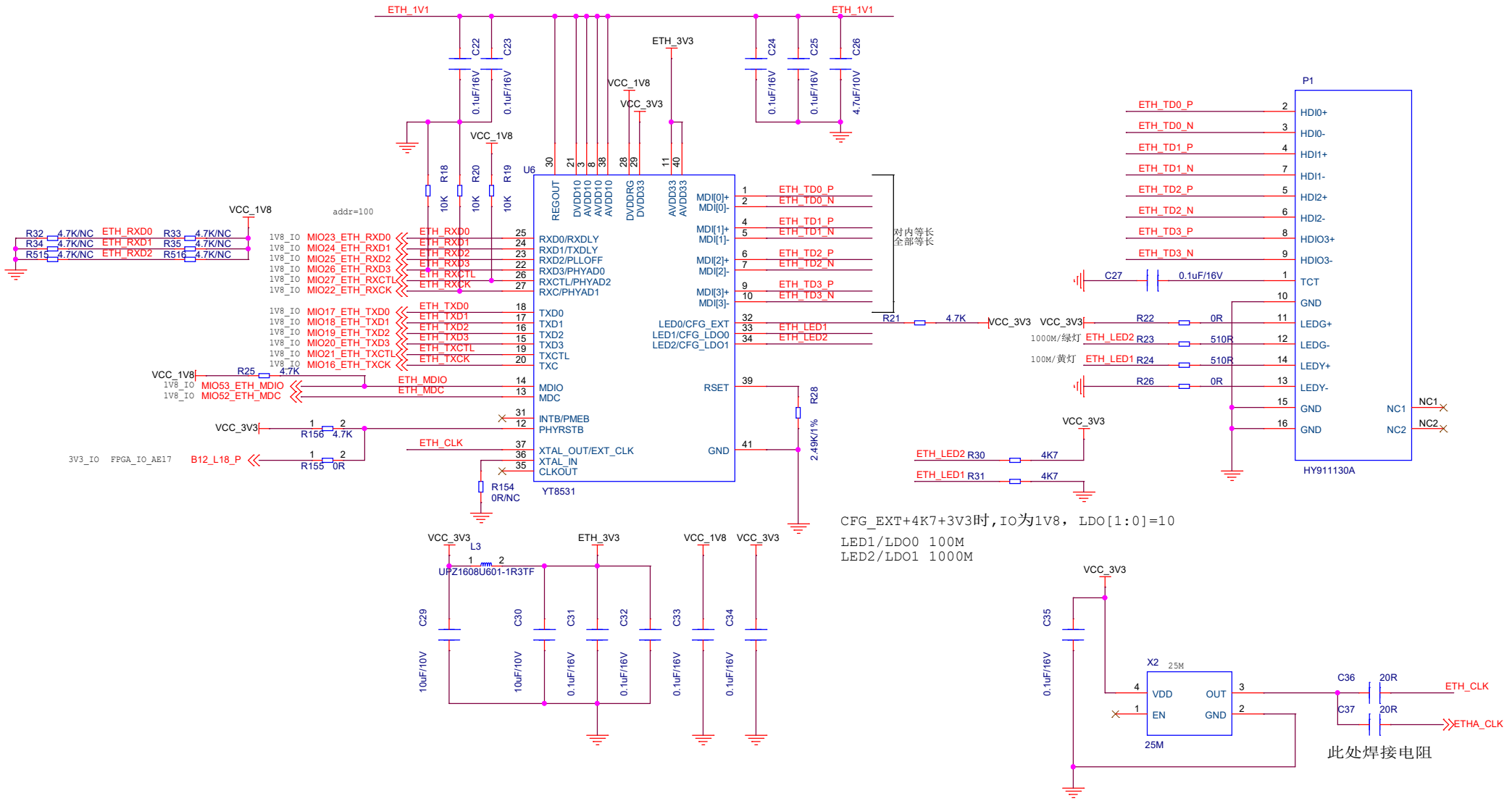

米联客 MiLianKe	
www.milianke.com	MLK-F29
ProjectName: <Doc>	
Size: B / Page Title: P06_PS_ETH / Rev: 20241205	
Date: Wednesday, January 22, 2025 / Sheet 6 of 20	

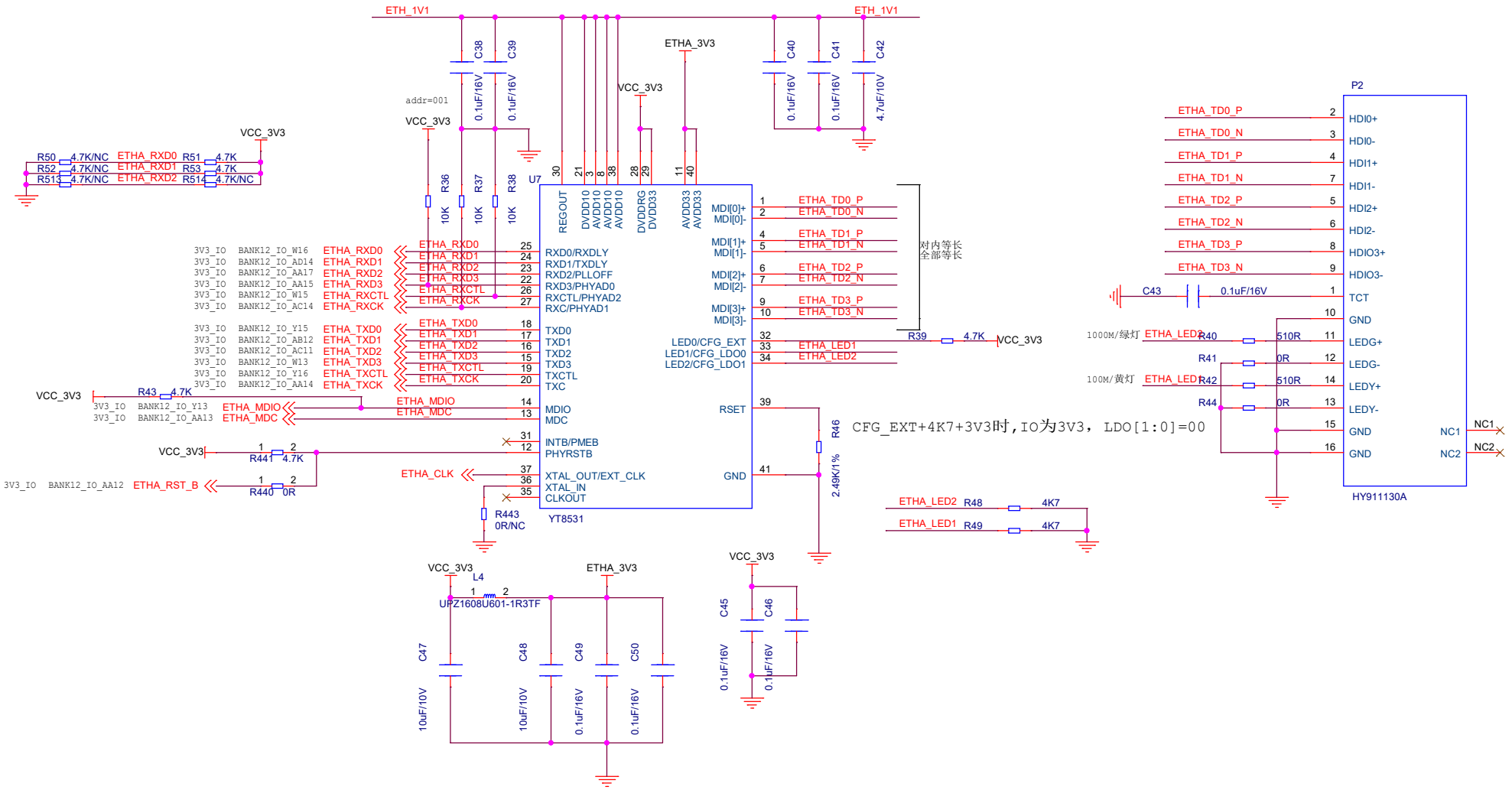
ETH_1V1
ETHA_3V3
VCC_3V3
addr=001
U7
YT8531
HY911130A
P2
对内等长
全部等长
CFG_EXT+4K7+3V3时,IO为3V3, LDO[1:0]=00
1000M/绿灯
100M/黄灯
UPZ1608U601-1R3TF
米联客
MiLianKe
www.milianke.com
MLK-F29
ProjectName: <Doc>
Size: B
Page Title: P07_PL_ETHA
Rev: 20241205
Date: Wednesday, January 22, 2025
Sheet 7 of 20

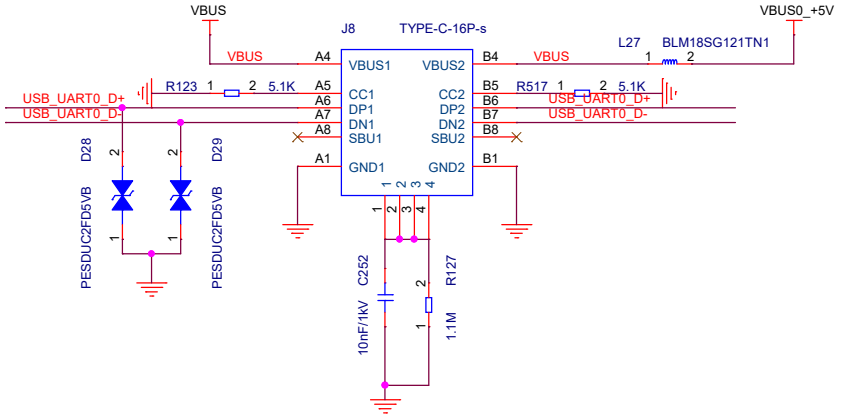

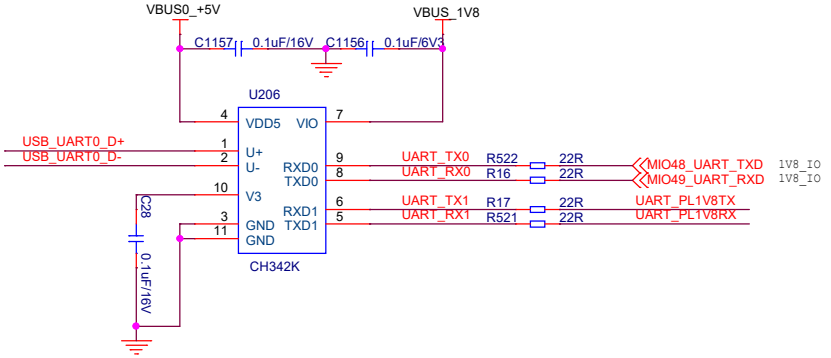

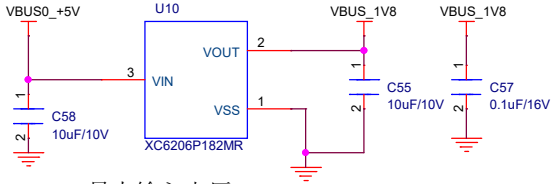

最大输入电压：8V
输出电压：3.3V
输出电流：250mA

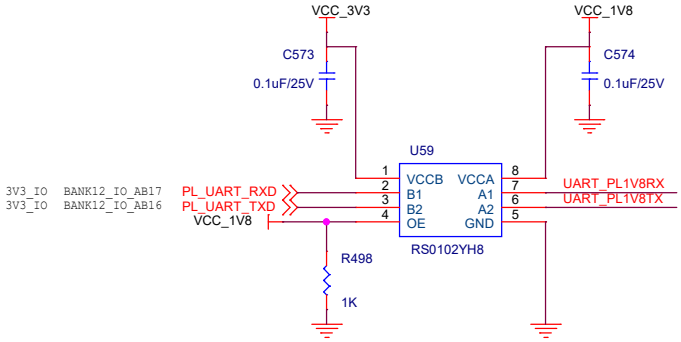

米联客 MiLianKe

www.milianke.com MLK-F29

ProjectName: <Doc>			
Size: B	Page Title: P08_PS_UART&PL_UART	Rev:	20241205
Date: Friday, January 24, 2025	Sheet 8 of 20		

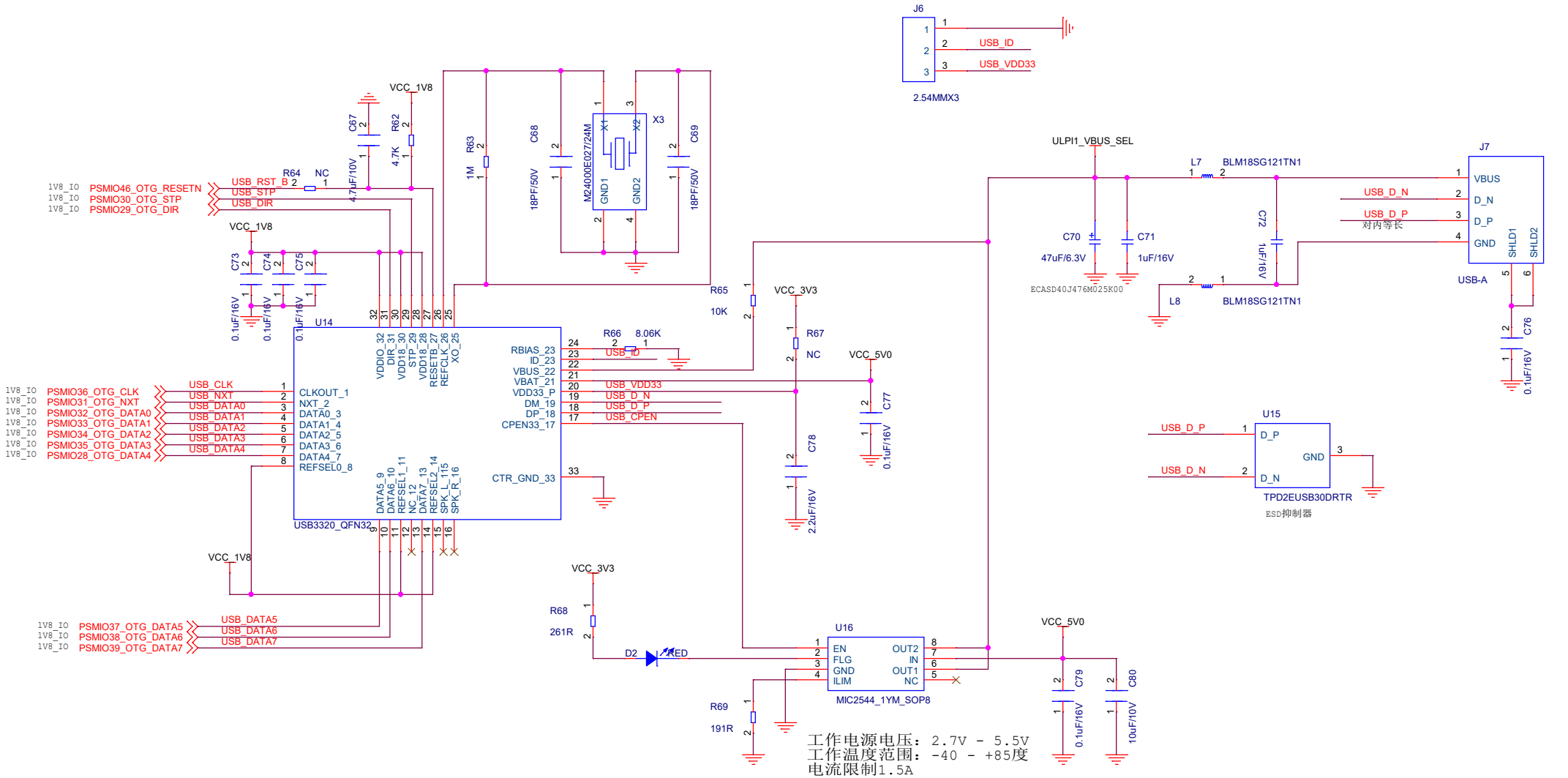

米联客 MiLianKe

www.milianke.com MLK-F29

ProjectName: <Doc>			
Size: B	Page Title: P09_PS_USB	Rev:	20241205
Date: Wednesday, January 22, 2025	Sheet 9 of 20		

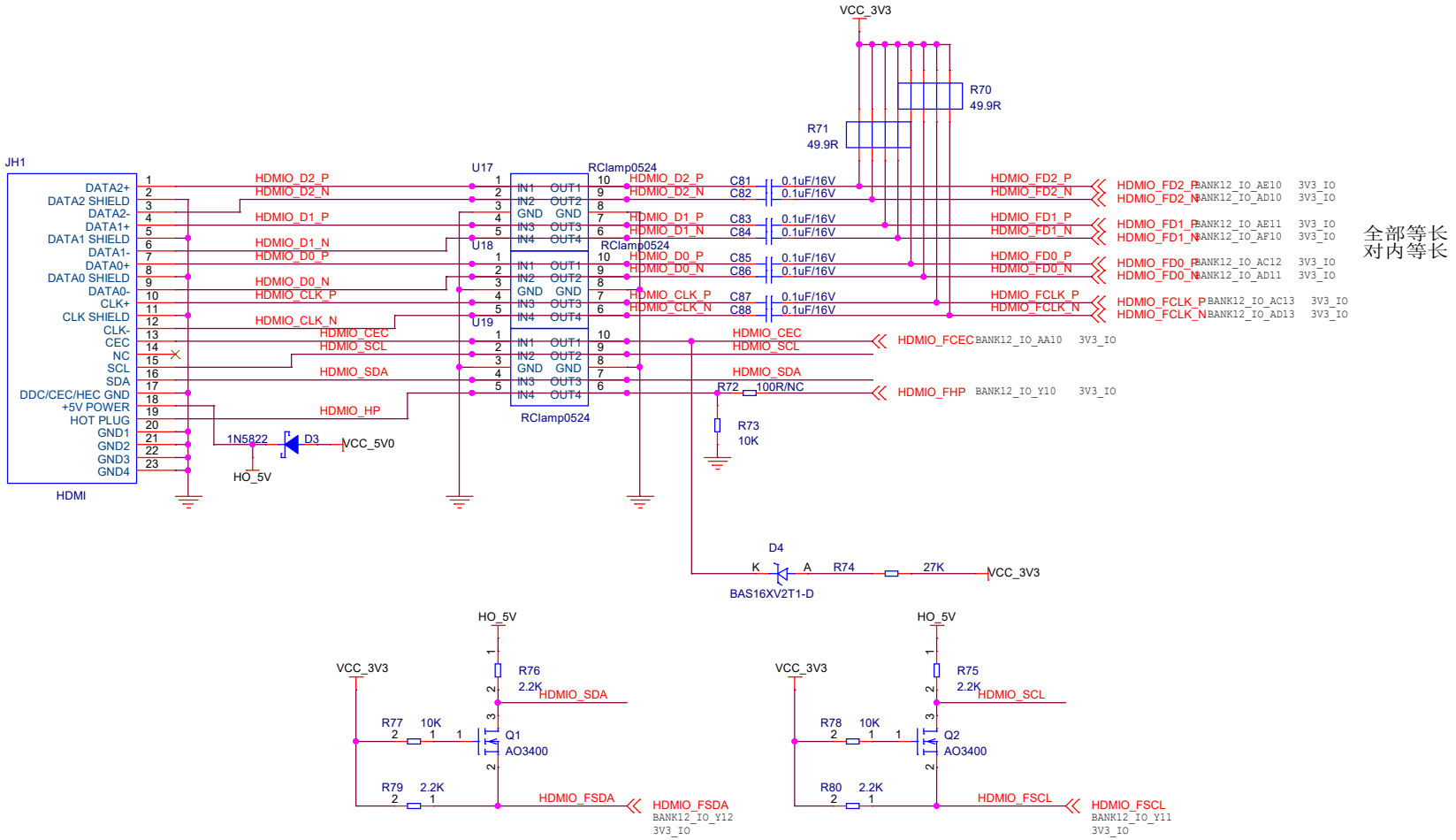

全部等长
对内等长

米联客 MiLianKe			
www.milianke.com			MLK-F29
ProjectName: <Doc>			
Size: B	Page Title: P10_HDMIOUT	Rev:	20241205
Date: Wednesday, January 22, 2025		Sheet 10 of 20	

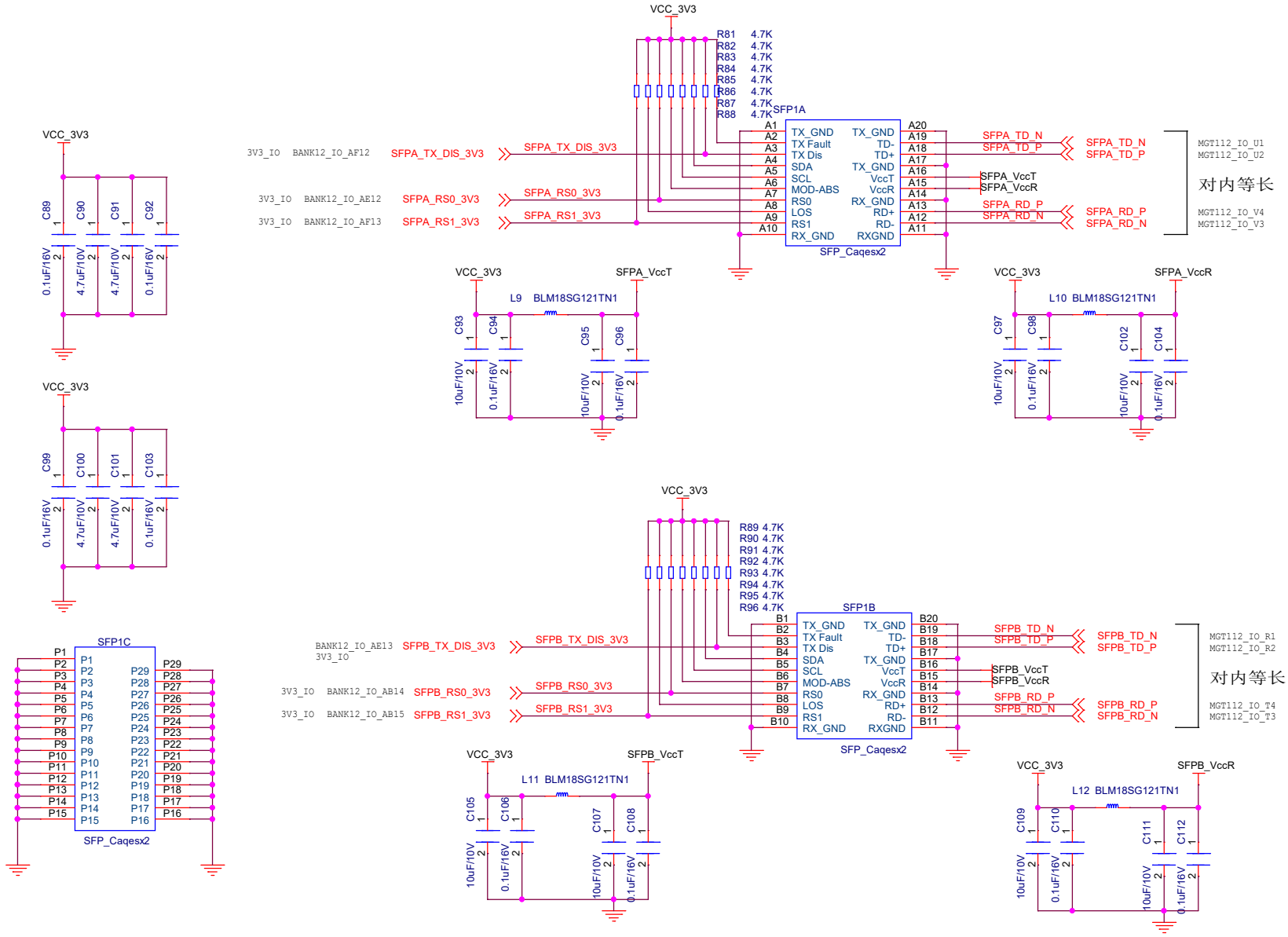

米联客 MiLianKe

www.milianke.com MLK-F29

ProjectName: <Doc>			
Size: B	Page Title: P11_SFPX2	Rev:	20241205
Date: Wednesday, January 22, 2025	Sheet 11 of 20		

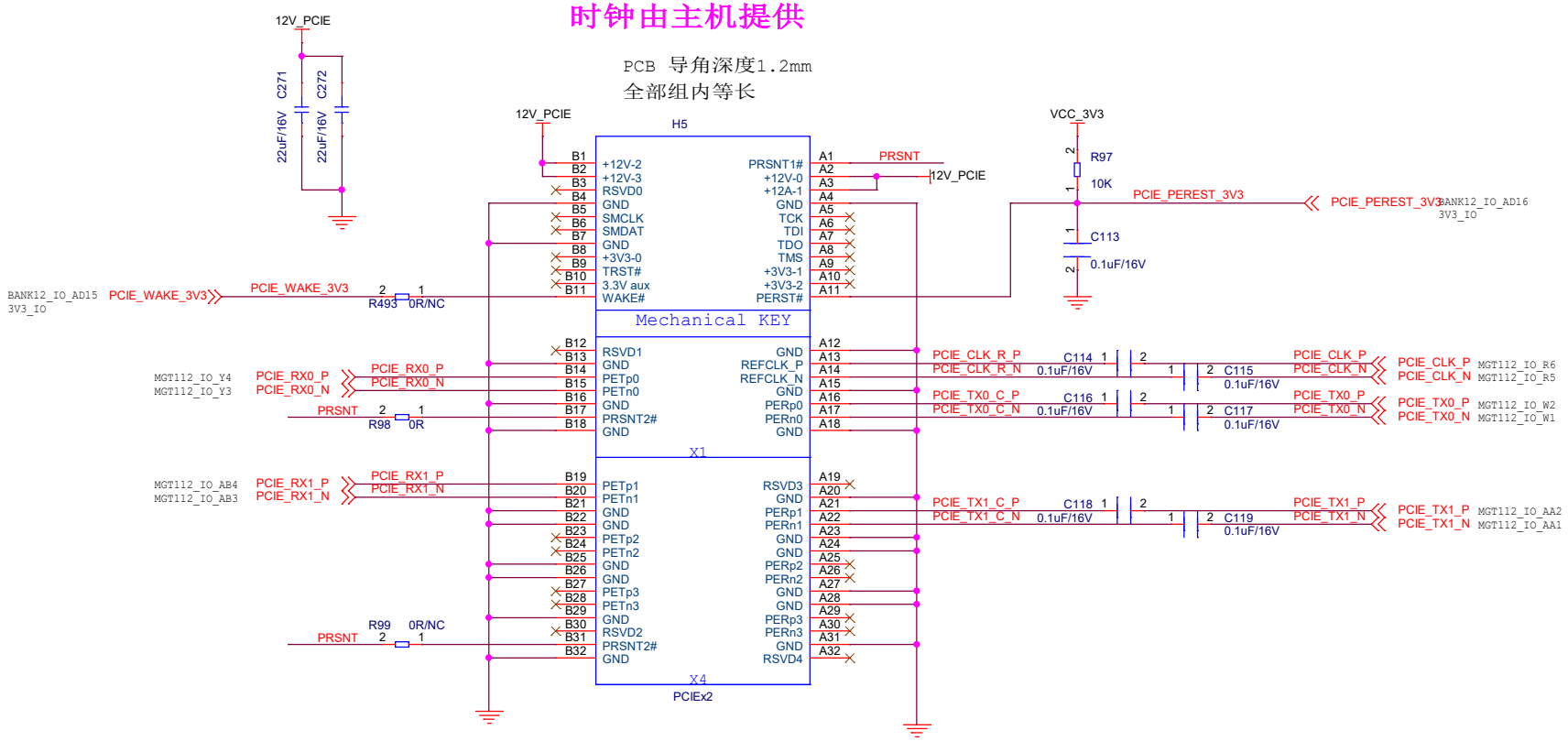

米联客 MiLianKe		
www.milianke.com		MLK-F29
ProjectName: <Doc>		
Size: B	Page Title: P12_PCIE	Rev: 20241205
Date: Wednesday, January 22, 2025	Sheet 12 of 20	

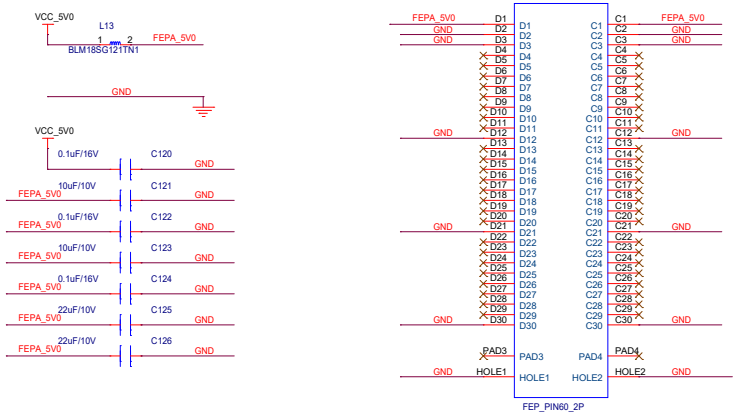

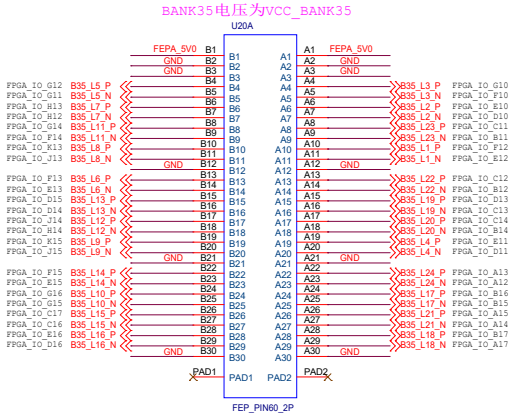

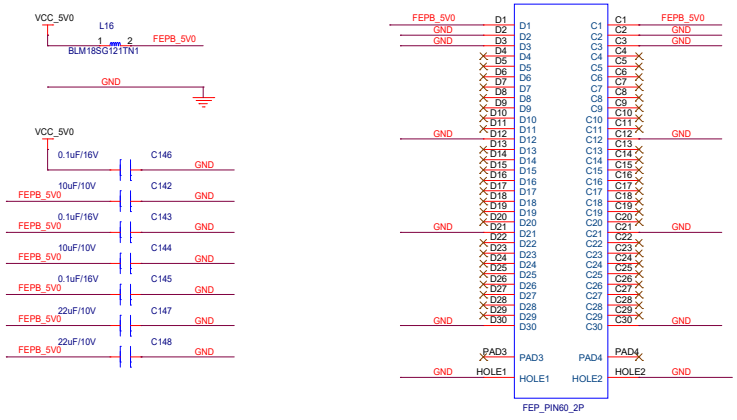

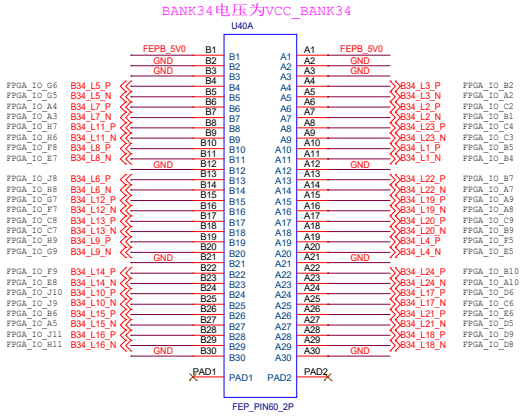

CZ10核心板未使用BANK34

米联客 MiLianKe

www.milianke.com MLK-F29

ProjectName:	<Doc>		
Size: C	Page Title: P13_FEP	Rev:	20241205
Date: Wednesday, January 22, 2025	Sheet 13 of 20		

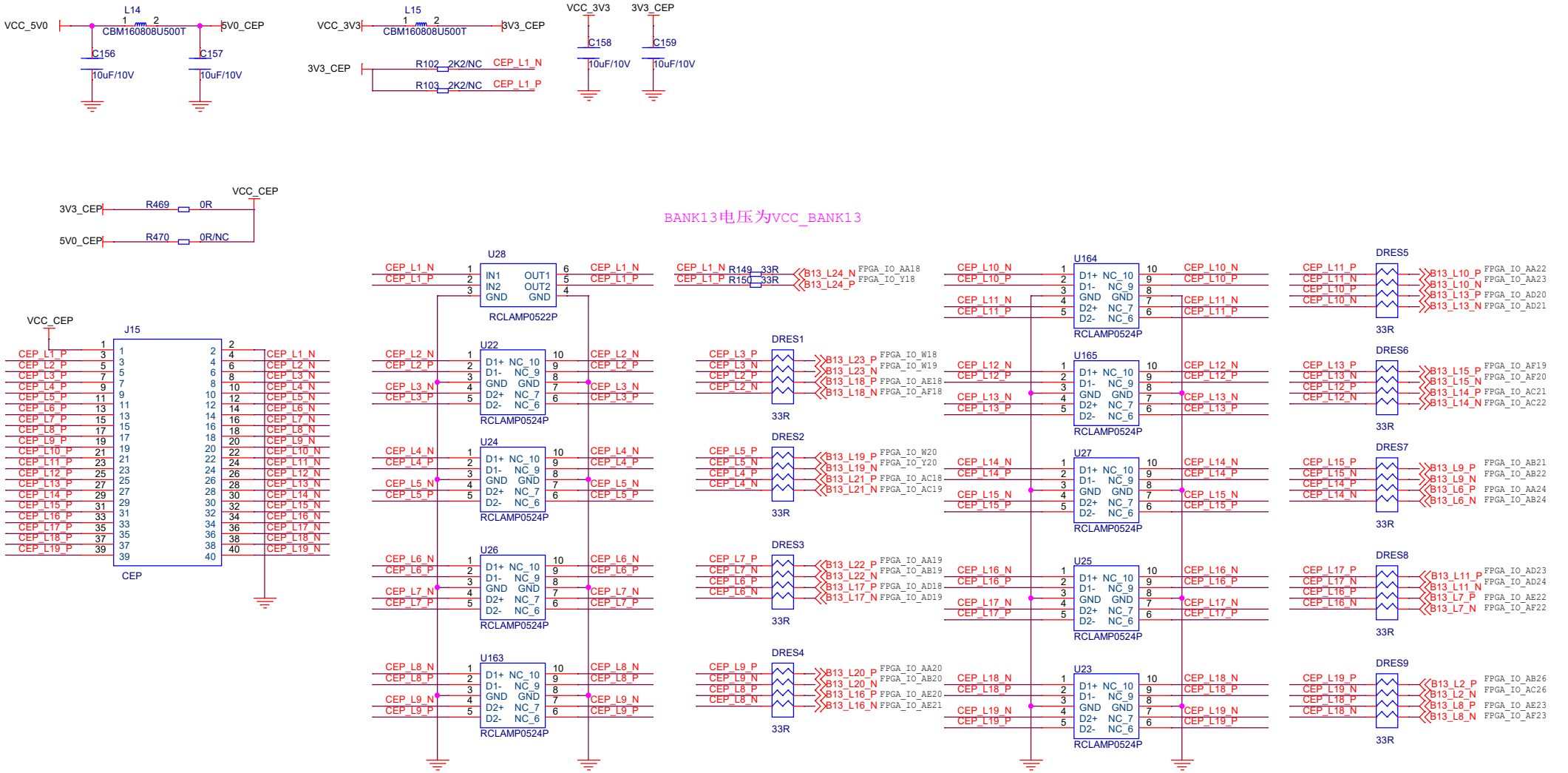

米联客 MiLianKe

www.milianke.com MLK-F29

ProjectName: <Doc>			
Size: B	Page Title: P14_CEP	Rev:	20241205
Date: Wednesday, January 22, 2025		Sheet 14 of 20	

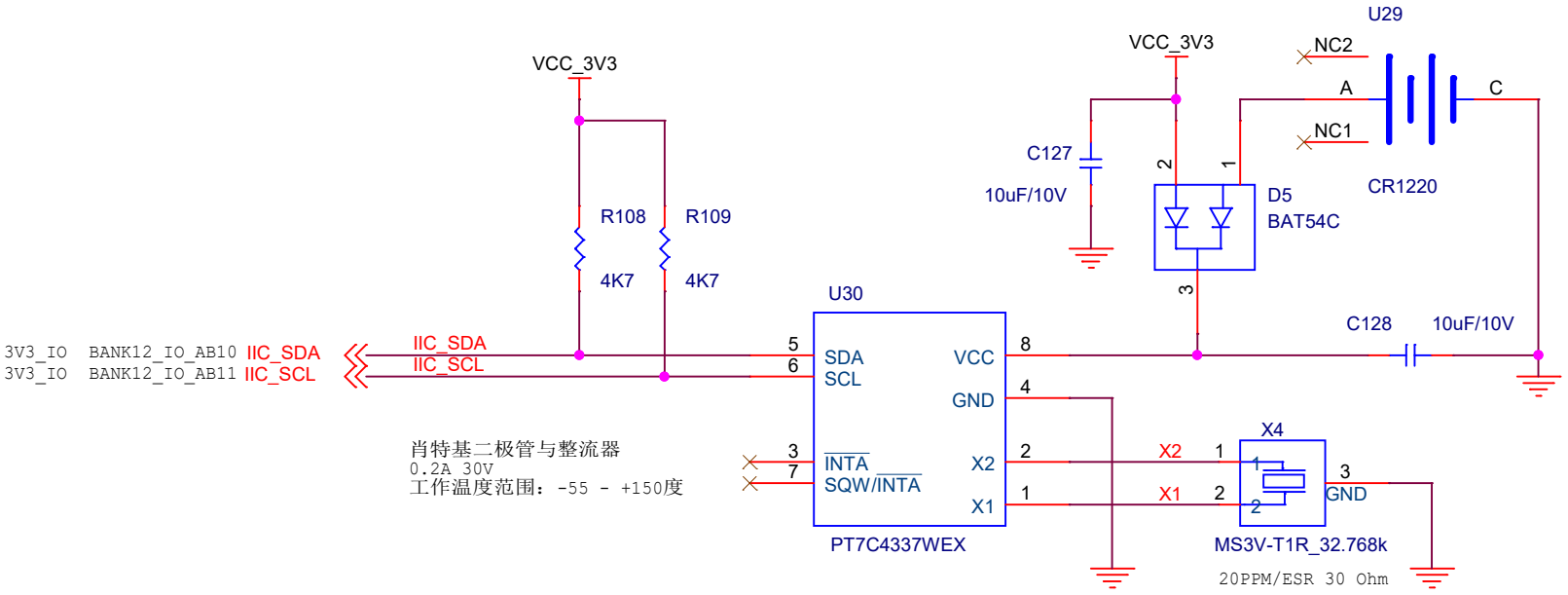

RTC时钟
工作温度范围：-40 - +85度
电源电压： 1.8V - 5.5V

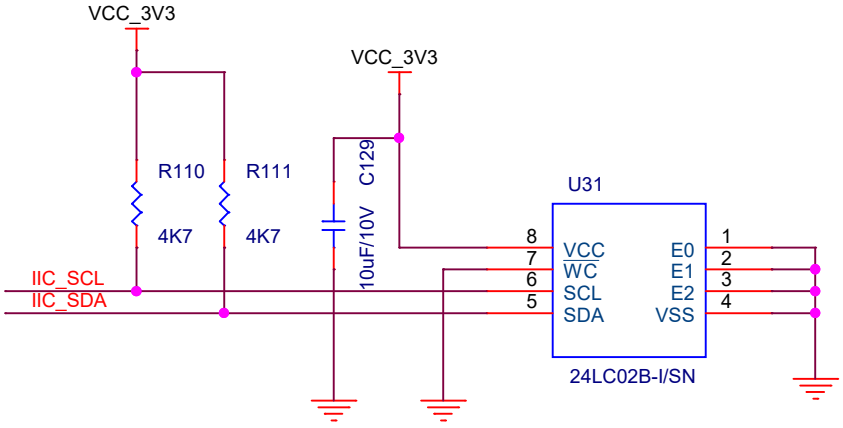

米联客 MiLianKe

www.milianke.com MLK-F29

ProjectName: <Doc>			
Size: A	Page Title: P15_EP&RTC	Rev:	20241205
Date: Friday, January 24, 2025	Sheet 15 of 20		

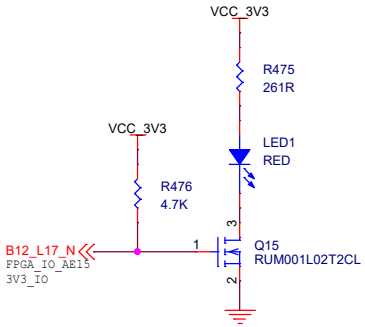

PL_LED1

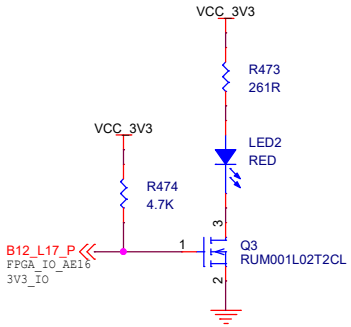

PL_LED2

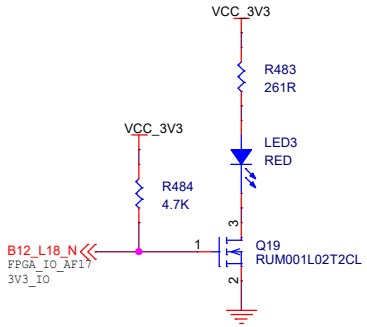

PL_LED3

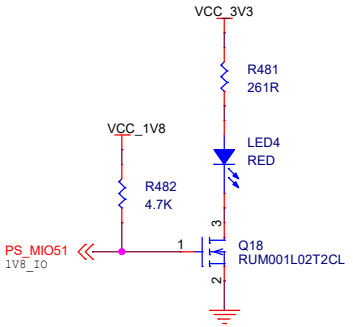

PS_LED4

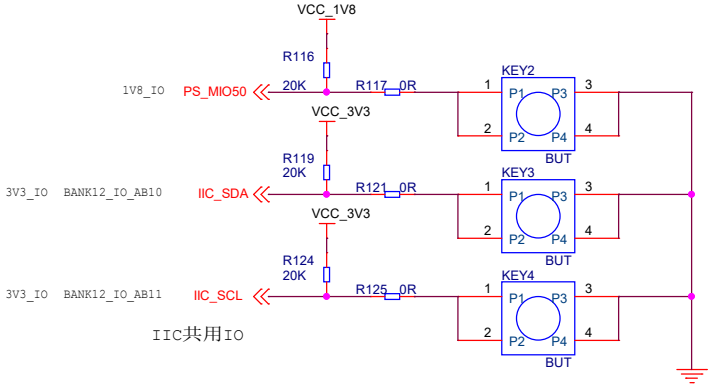

IIC共用IO

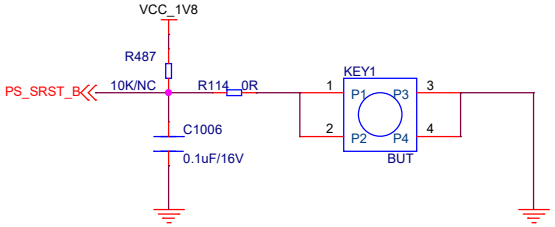

米联客 MiLianKe

www.milianke.com MLK-F29

ProjectName: <Doc>			
Size: B	Page Title: P16_LED&KEY	Rev:	20241205
Date: Wednesday, January 22, 2025	Sheet 16 of 20		

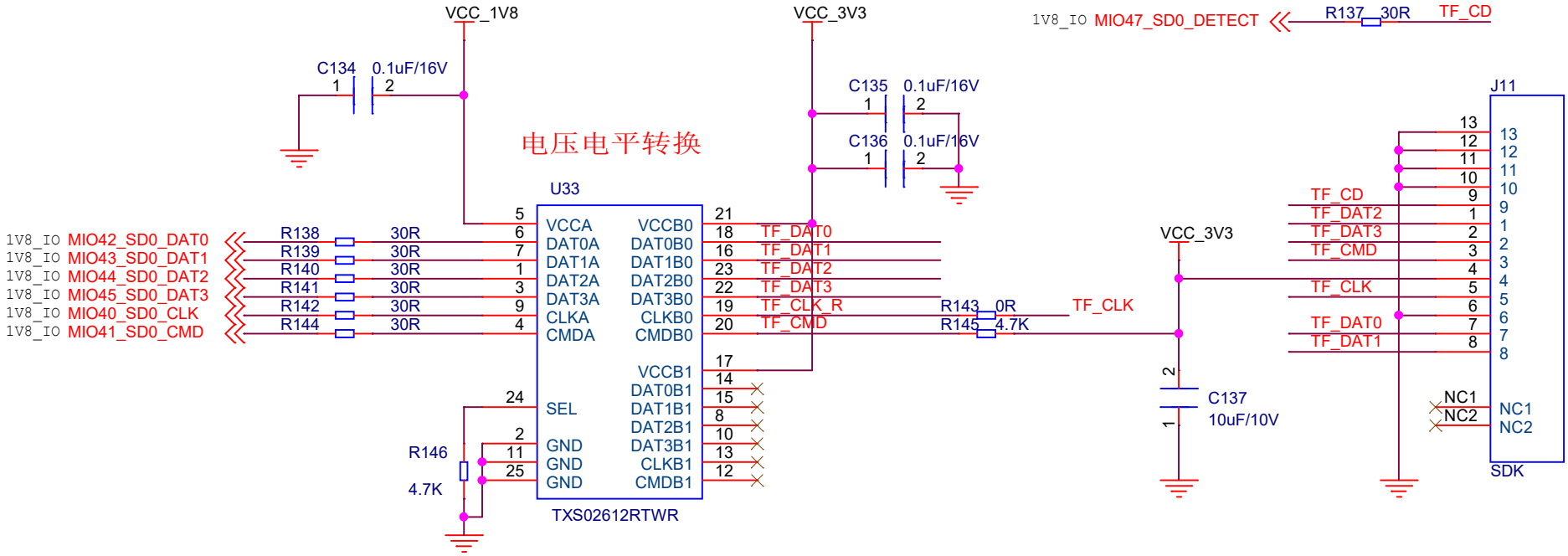

米联客 MiLianKe

www.milianke.com MLK-F29

ProjectName: <Doc>			
Size: A	Page Title: P17_TF	Rev:	20241205
Date: Wednesday, January 22, 2025	Sheet 17 of 20		

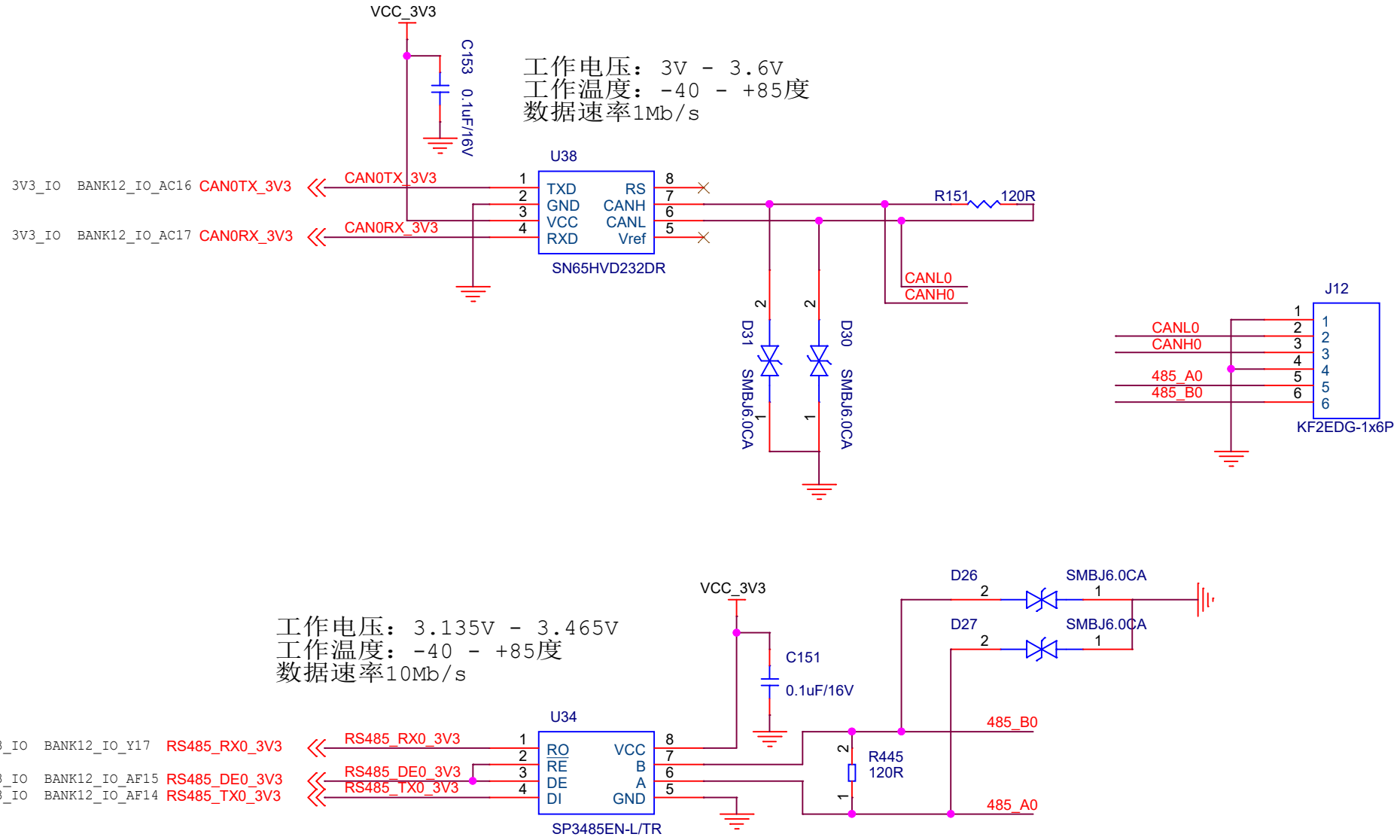

米联客 MiLianKe

www.milianke.com MLK-F29

ProjectName: <Doc>			
Size: A	Page Title: P18_CAN&RS485	Rev:	20241205
Date: Wednesday, January 22, 2025	Sheet 18 of 20		

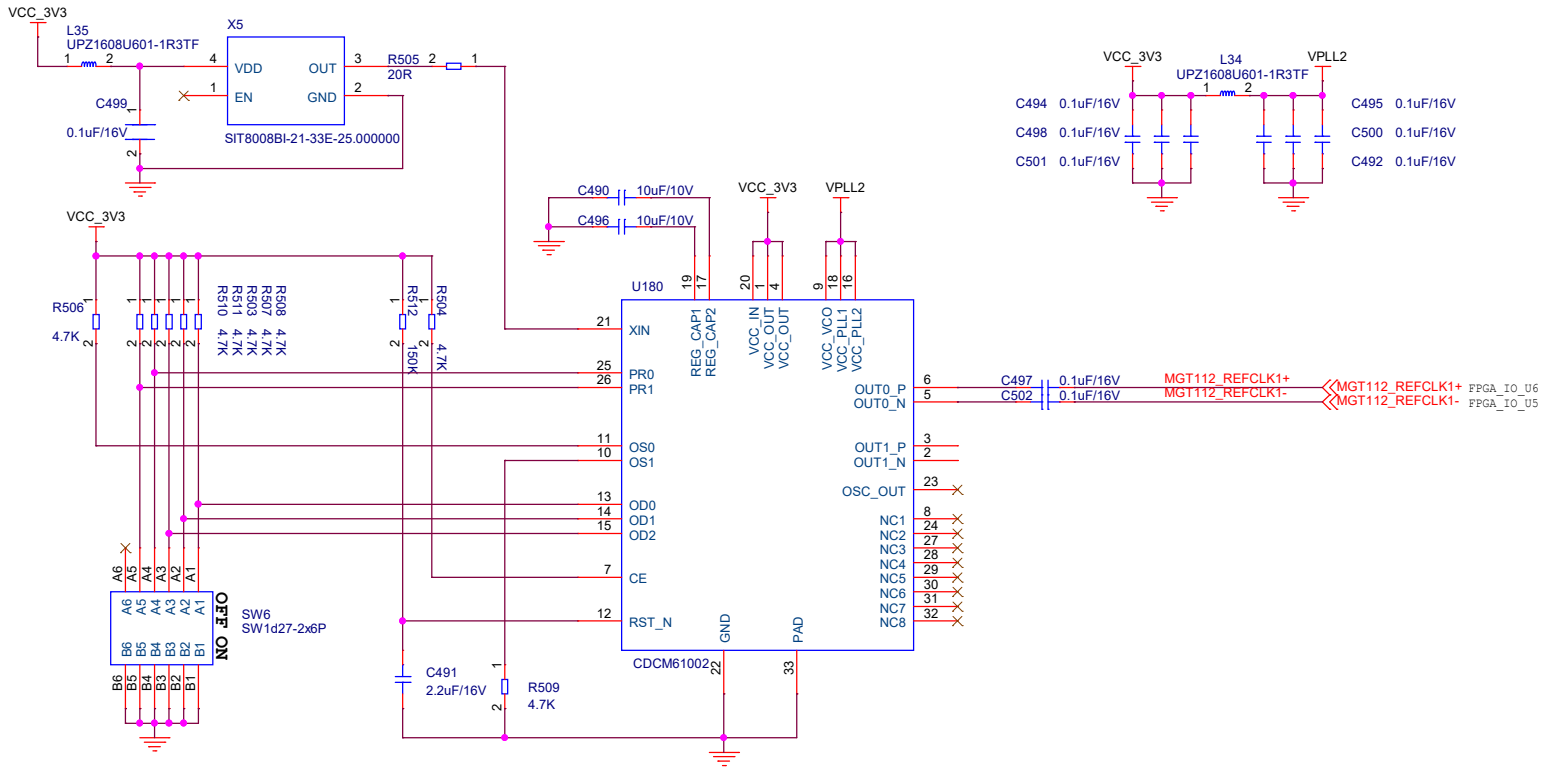

Prescale Divider	Feedback Divider	PR1/PR0	VCO MHZ	Output Divider	OD2/OD1 /OD0	Output MHZ	Application
4	20	11	2000	8	111	62.5	GigE
3	24	00	1800	8	111	75	SATA
3	24	00	1800	6	101	100	PCIE
4	20	11	2000	4	011	125	Gige
3	24	00	1800	4	011	150	SATA
3	25	10	1875	4	011	156.25	10GigE
5	15	01	1875	2	001	187.5	12GigE
3	24	00	1800	3	010	200	PCIE
4	20	11	2000	2	001	250	GigE
3	25	10	1875	2	001	312.5	XGMII
3	25	10	1875	1	000	625	10GigE

米联客 MiLianKe

www.milianke.com MLK-F29

ProjectName: <Doc>

Size: B | Page Title: P19_GTX_CLK | Rev: 20241205

Date: Wednesday, January 22, 2025 | Sheet 19 of 20

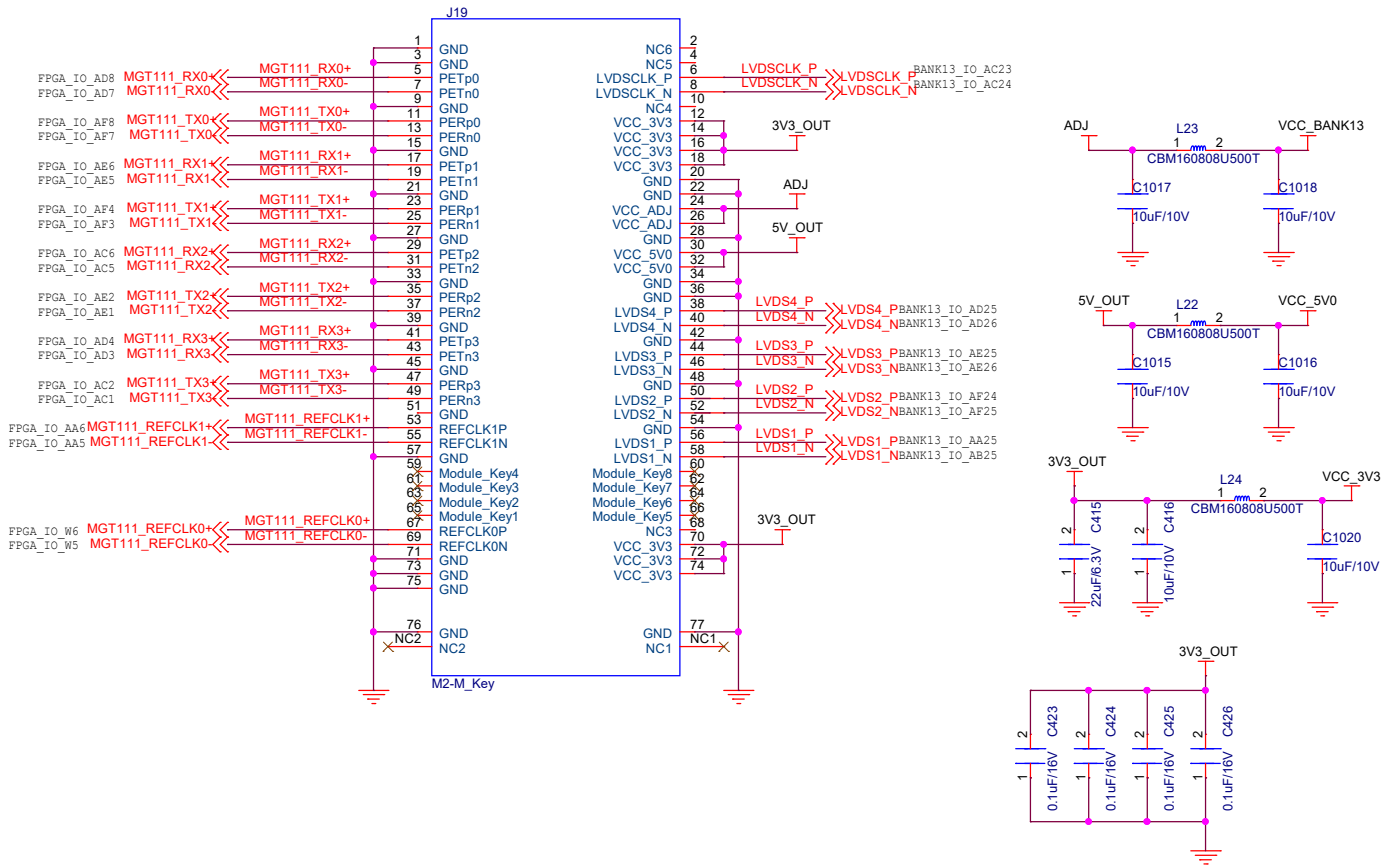

米联客 MiLianKe	
www.milianke.com	MLK-F29
ProjectName: <Doc>	
Size: B / Page Title: P20_M2_M / Rev: 20241205	
Date: Wednesday, January 22, 2025 / Sheet 20 of 20	