PAGE	DESCRIPTION	NOTE
1	P01_TItle	
2	P02_Block	
3	P03_connect	
4	P04_Power	
5	P05_JTAG	
6	P06_PS_ETH	
7	P07_PL_ETHA	
8	P08_PS_USBA	
9	P09_PS_USBB	
10	P10_TF	
11	P11_HDMIOUT	
12	P12_EP&RTC	
13	P13_LED&KEY	
14	P14_CAN&RS485	
15	P15_FEP	
16	P16_CEP	
17	P17_AUDIO	
18	P18	
19	P19	
20	P20	
21	P21	
22	P22	

米联客 MiLianKe

www.milianke.com MLK_F3P

ProjectName: <Doc>

Size: A4 | Page Title: <Title> | Rev: <RevCode>

Date: Wednesday, November 05, 2025 | Sheet 1 of 17

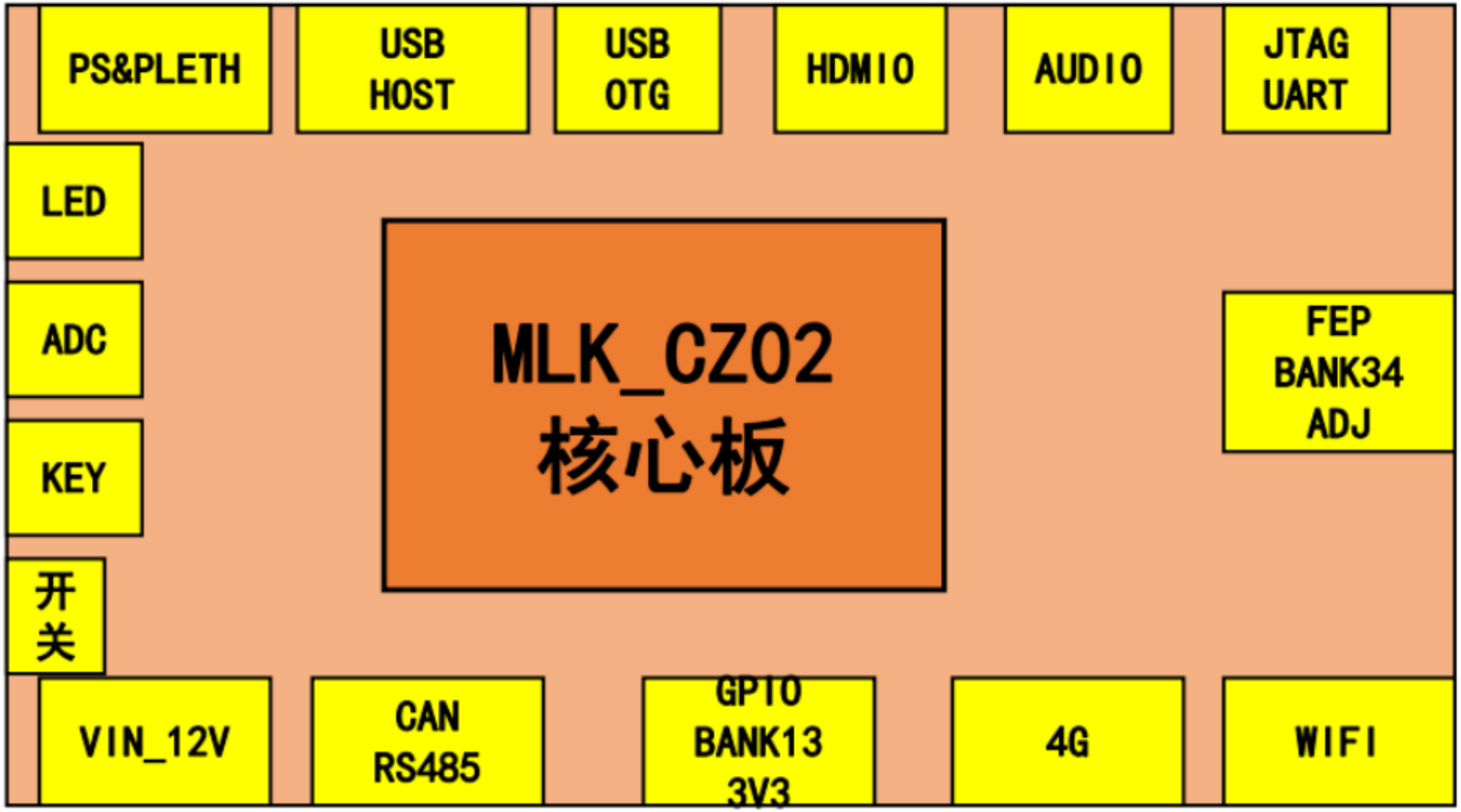

米联客 MiLianKe			
www.milianke.com		MLK_F3P	
ProjectName: <Doc>			
Size: A4	Page Title: <Title>	Rev:	<RevCode>
Date: Wednesday, November 05, 2025		Sheet 2 of 17	

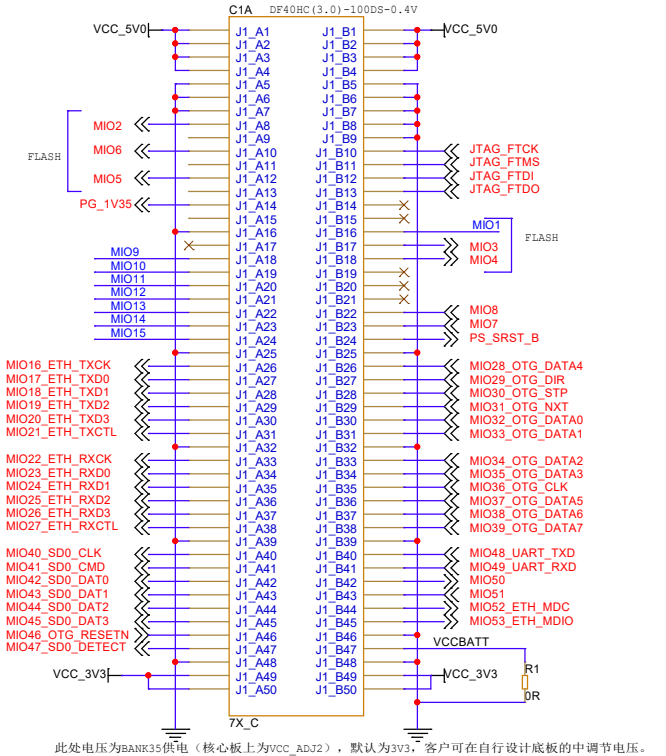

此处电压为BANK35供电（核心板上为VCC_ADJ2），默认为3V3，客户可在自行设计底板的中调节电压。

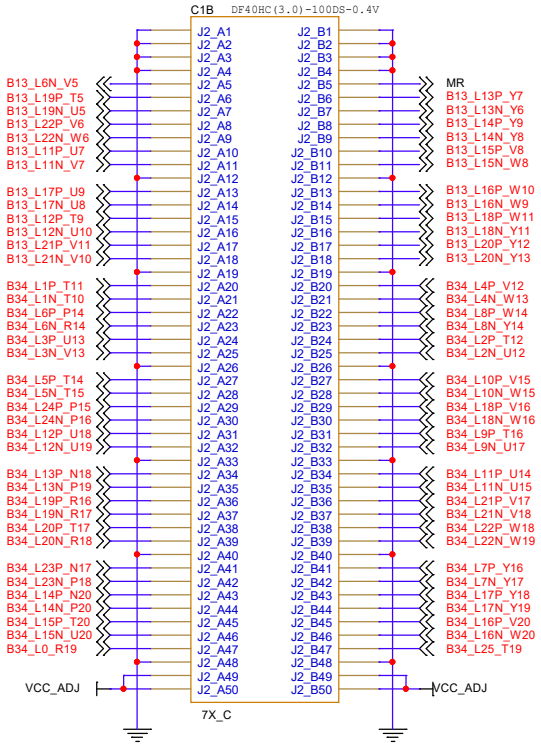

VCC_ADJ为BANK34供电（核心板上为VCC_ADJ1），发货默认为1V8。

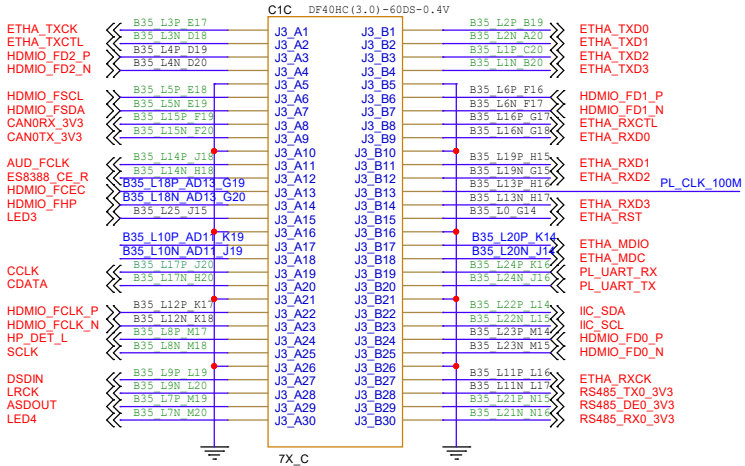

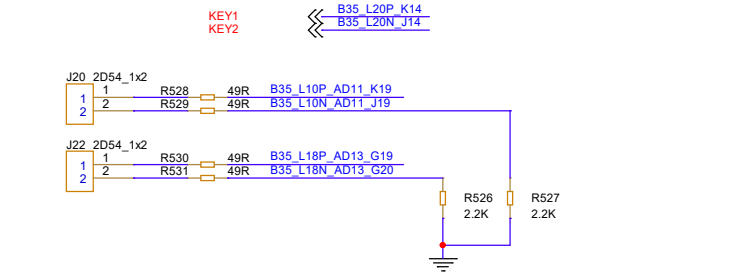

底板固定孔

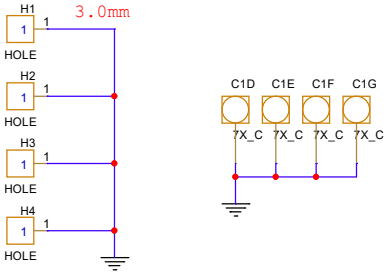

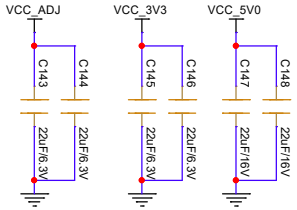

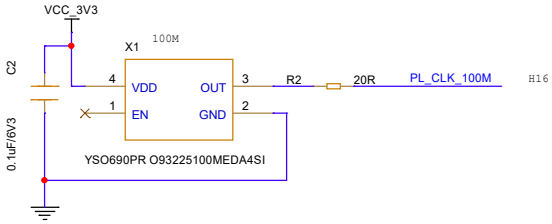

米联客 MiLianKe

www.milianke.com MLK_F3P

ProjectName:	<Doc>		
Size: A3	Page Title: <Title>	Rev:	<RevCode>
Date: Wednesday, November 05, 2025		Sheet 3	of 17

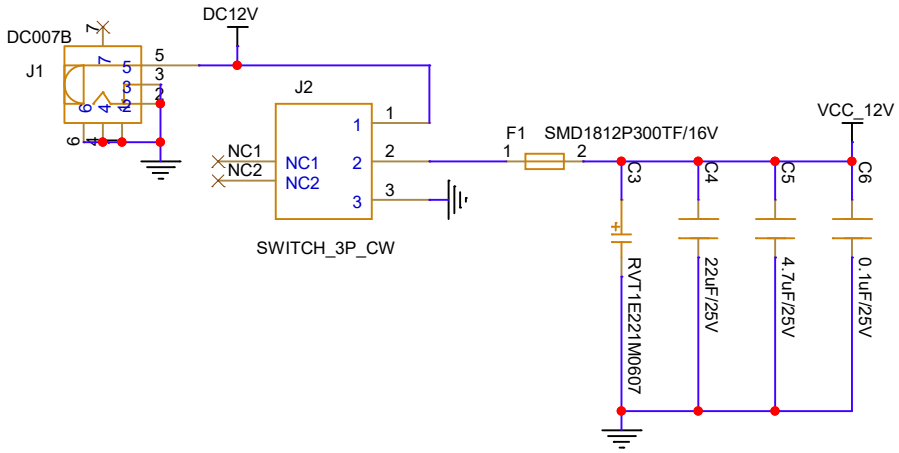

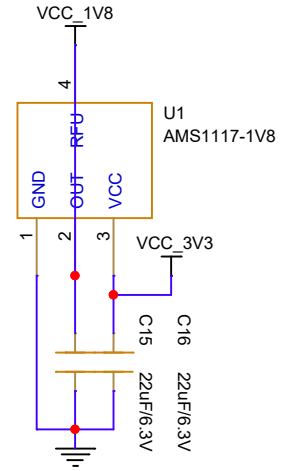

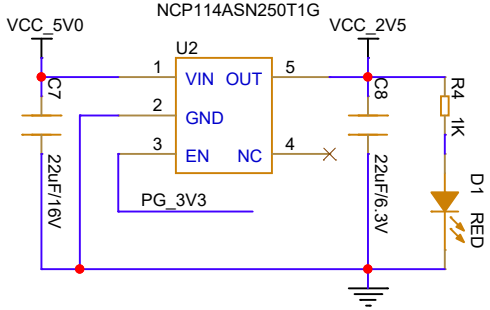

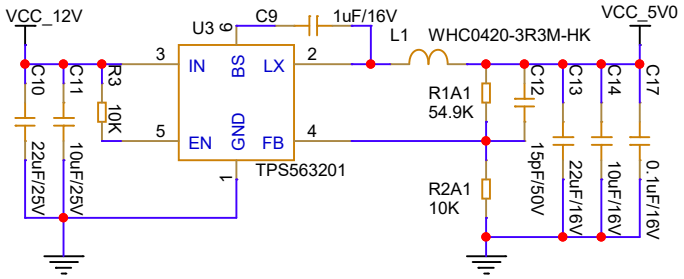

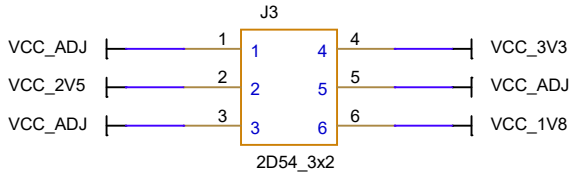

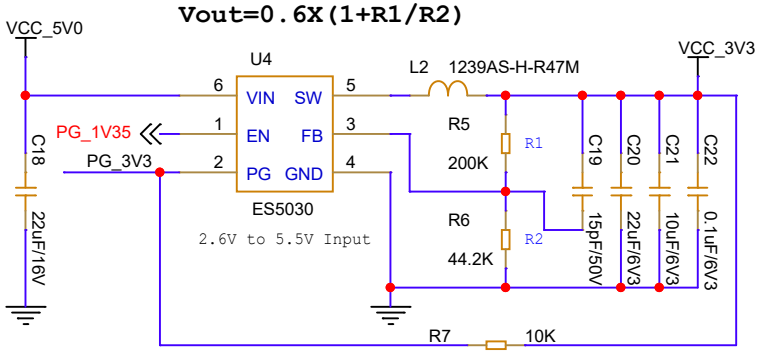

米联客 MiLianKe

www.milianke.com MLK_F3P

ProjectName: <Doc>			
Size: A4	Page Title: <Title>	Rev:	<RevCode>
Date: Monday, May 26, 2025		Sheet 4 of 17	

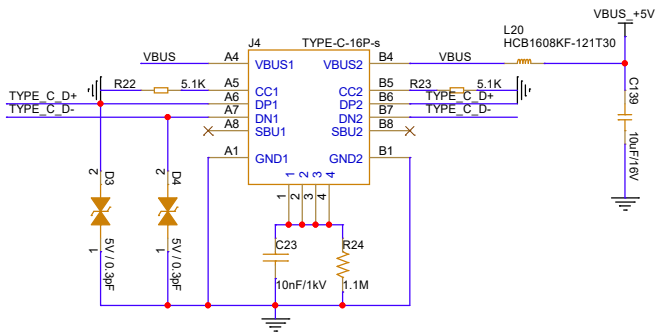

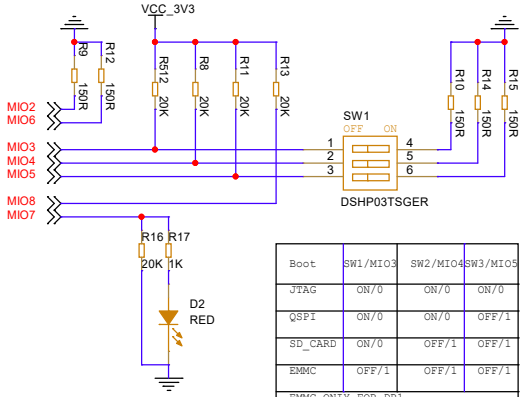

Boot	SW1/MIO3	SW2/MIO4	SW3/MIO5
JTAG	ON/0	ON/0	ON/0
QSPI	ON/0	ON/0	OFF/1
SD_CARD	ON/0	OFF/1	OFF/1
EMMC	OFF/1	OFF/1	OFF/1
EMMC ONIY FOR DR1			

拨码开关至ON为低电平信号0
拨码开关至OFF为高电平信号1

Pin-signal / Mode	MIO[8] VMODE[1]	MIO[7] VMODE[0]	MIO[6] BOOT_MODE[4]	MIO[5] BOOT_MODE[0]	MIO[4] BOOT_MODE[2]	MIO[3] BOOT_MODE[1]	MIO[2] BOOT_MODE[3]
Boot Devices							
JTAG Boot Mode; cascaded is most common(1)				0	0	0	JTAG Chain Routing(2) 0: Cascade mode 1: Independent mode
NOR Boot(3)				0	0	1	
NAND				0	1	0	
Quad-SPI(3)				1	0	0	
SD Card				1	1	0	

Mode for all 3 PLLs		
PLL Enabled	0	Hardware waits for PLL to lock, then executes BootROM.
PLL Bypassed	1	Allows for a wide PS_CLK frequency range.

MIO Bank Voltage(4)	Bank 1	Bank 0	
2.5 V, 3.3 V	0	0	Voltage Bank 0 includes MIO pins 0 thru 15. Voltage Bank 1 includes MIO pins 16 thru 53.
1.8 V	1	1	

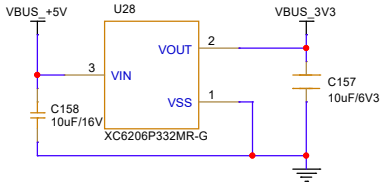

最大输入电压：8V
输出电压：3.3V
输出电流：250mA

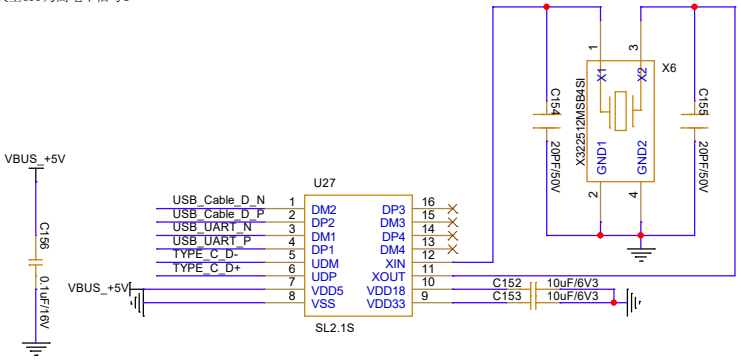

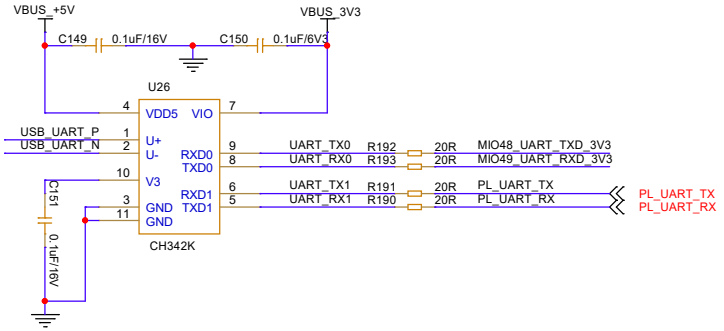

B35_L24N_J16
B35_L24P_K16

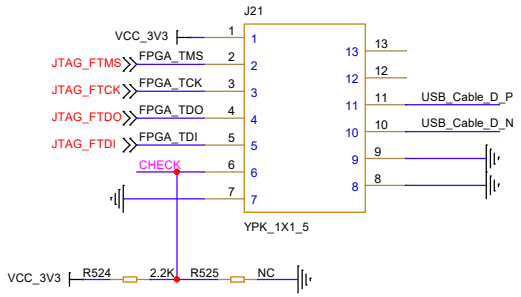

开发板是安路，CHECK引脚上拉2.2K电阻放在底板上
开发板是xilinx，CHECK引脚下拉2.2K电阻放在底板上

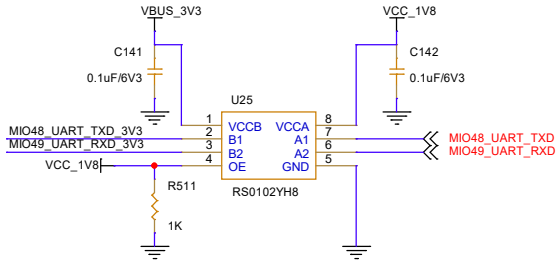

米联客 MiLianKe
www.milianke.com
MLK_F3P

ProjectName:	<Doc>		
Size: A3	Page Title: <Title>	Rev:	<RevCode>
Date: Wednesday, November 05, 2025		Sheet 5 of 17	

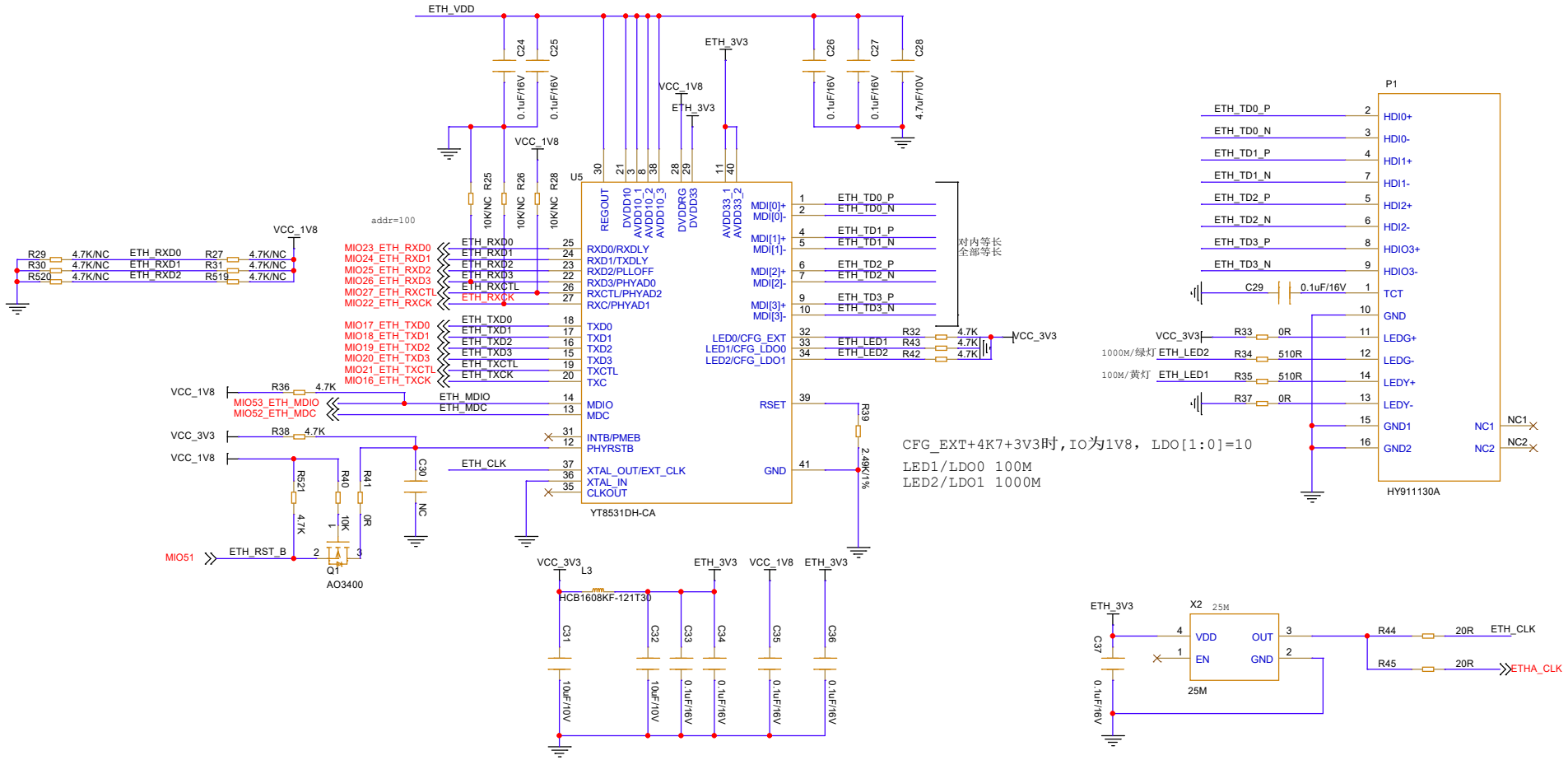

米联客 MiLianKe

www.milianke.com

MLK_F3P

ProjectName:	<Doc>		
Size: A3	Page Title: <Title>	Rev:	<RevCode>
Date: Monday, May 26, 2025		Sheet 6 of 17	

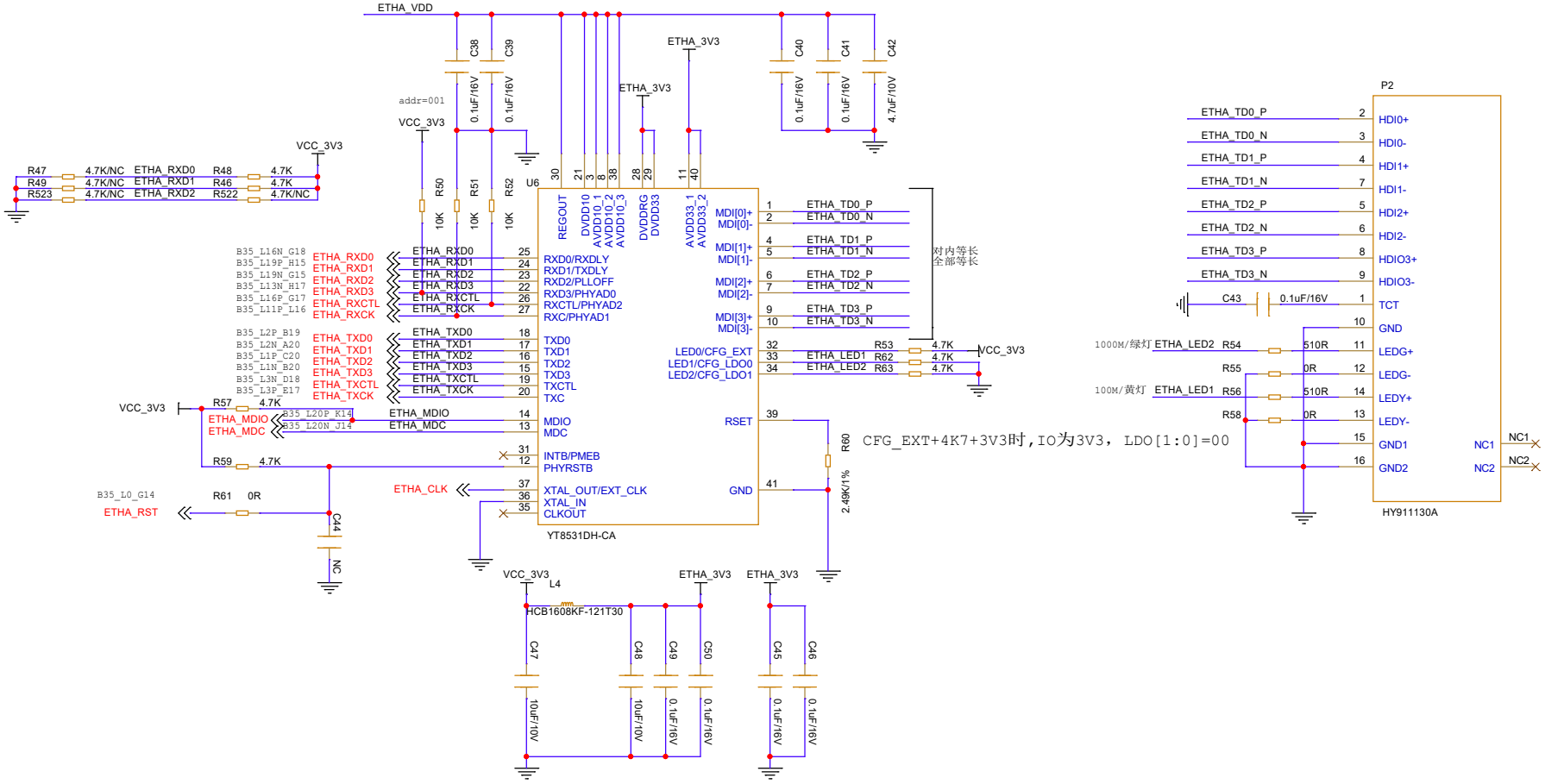

米联客	MiLianKe
www.milianke.com	MLK_F3P
ProjectName: <Doc>	
Size: A3 / Page Title: <Title> / Rev: <RevCode>	
Date: Wednesday, November 05, 2025 / Sheet 7 of 17	

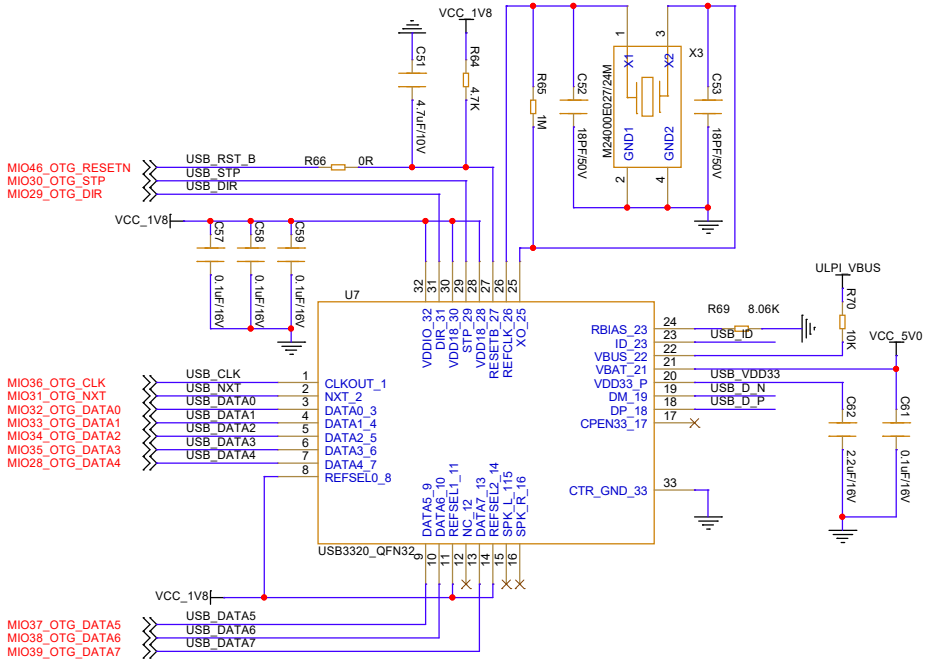

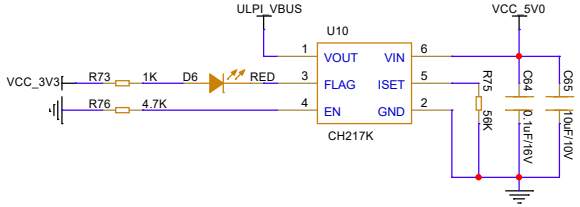

工作电源电压：2.7V - 5.5V
工作温度范围：-40 - +85度
电流限制400mA~2.7A

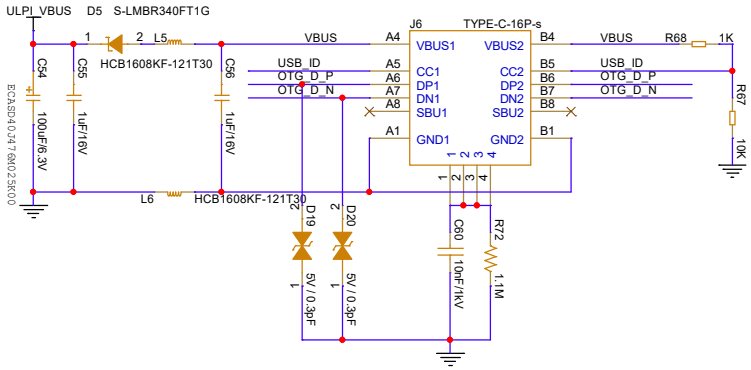

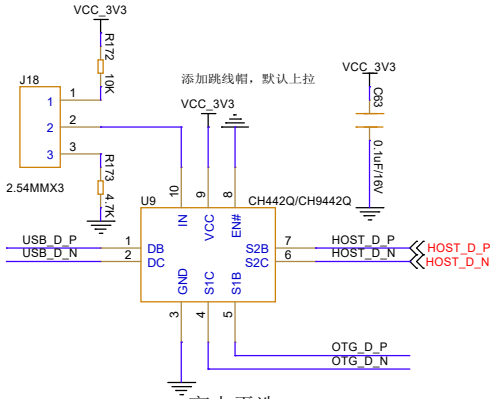

IN 高电平选S2X
IN 低电平选S1X

米联客 MiLianKe
www.milianke.com
MLK_F3P

ProjectName:	<Doc>		
Size: A3	Page Title: <Title>	Rev:	<RevCode>
Date: Wednesday, November 05, 2025		Sheet 8	of 17

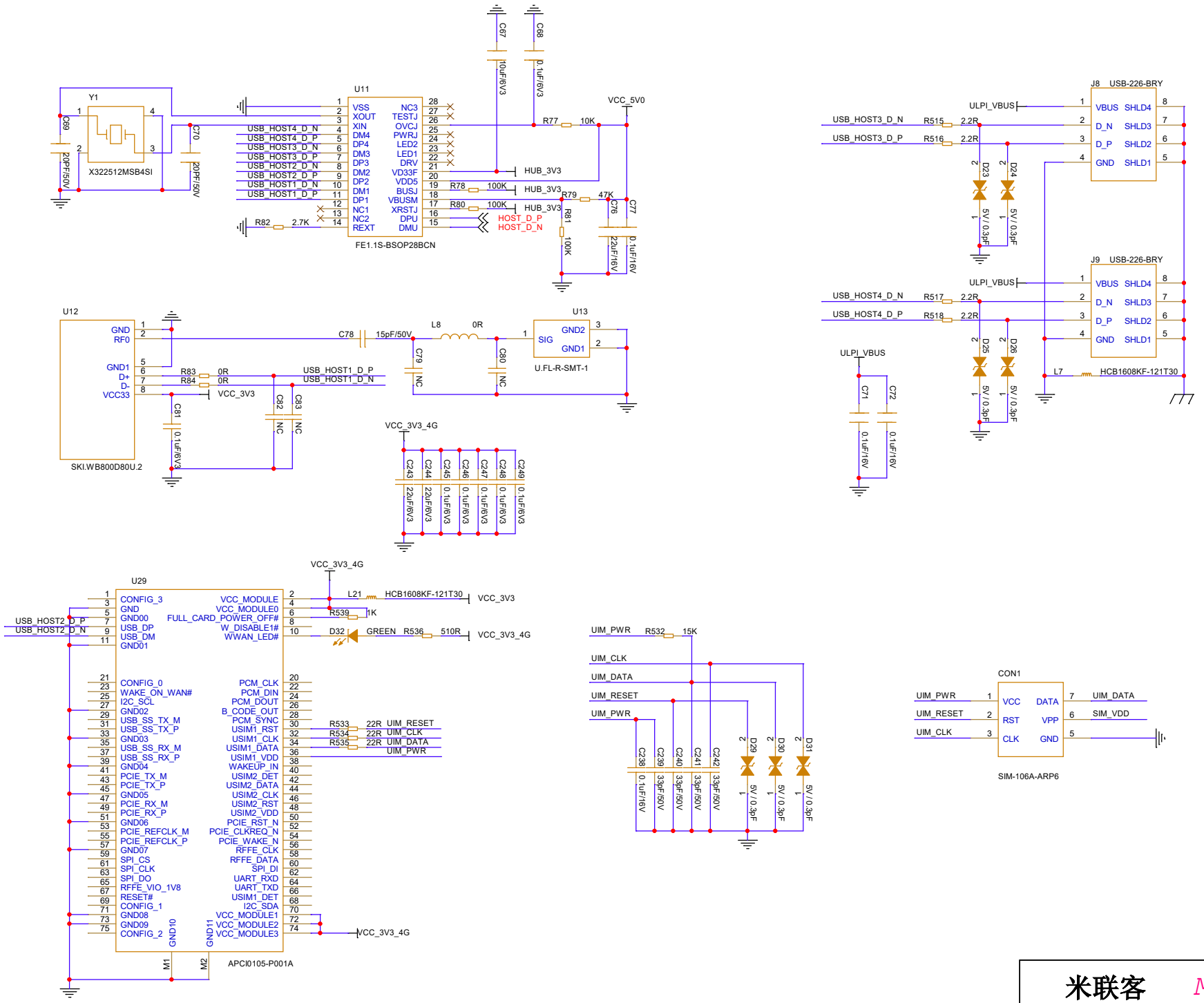
U11
FE1.1S-BSOP28BCN
Y1
X322512MSB4SI
VCC_5V0
HUB_3V3
HOST_D_P
HOST_D_N
U12
SKI.WB800D80U.2
U13
U.FL-R-SMT-1
VCC_3V3
VCC_3V3_4G
J8 USB-226-BRY
J9 USB-226-BRY
ULPI_VBUS
L7 HCB1608KF-121T30
U29
APCI0105-P001A
L21 HCB1608KF-121T30
D32 GREEN
CON1
SIM-106A-ARP6
UIM_PWR
UIM_CLK
UIM_DATA
UIM_RESET
米联客
MiLianKe
www.milianke.com
MLK_F3P

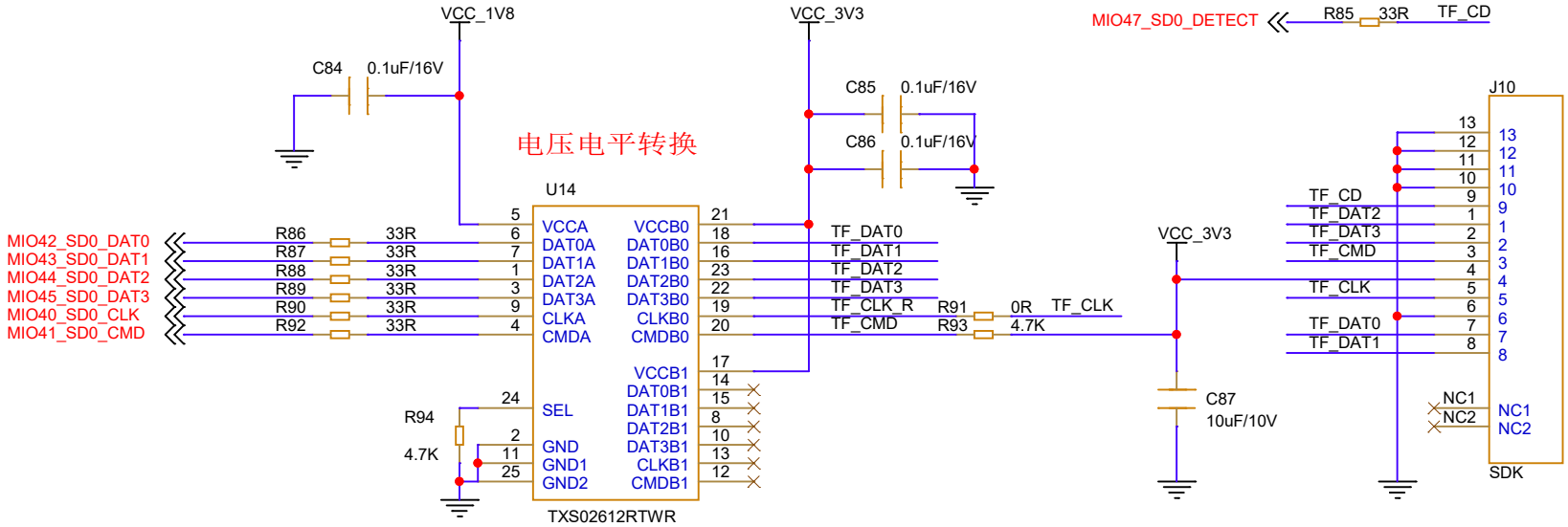

米联客 MiLianKe

www.milianke.com MLK_F3P

ProjectName: <Doc>			
Size: A4	Page Title: <Title>	Rev:	<RevCode>
Date: Monday, May 26, 2025		Sheet 10 of 17	

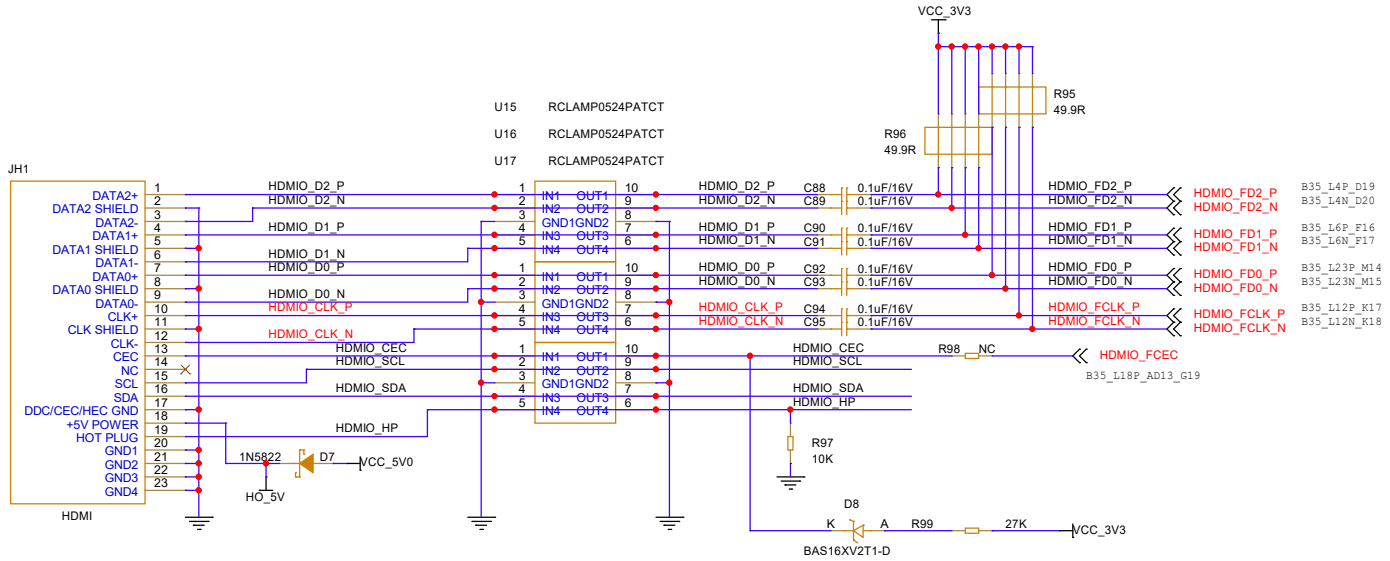

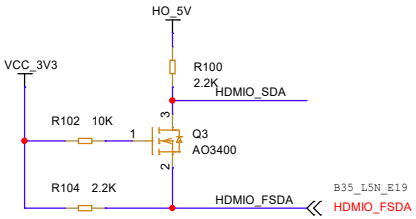

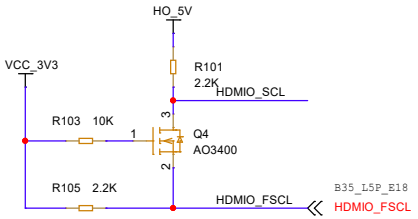

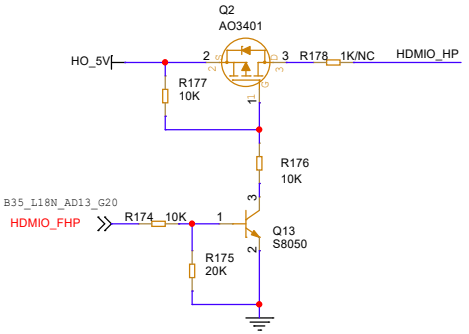

米联客 MiLianKe

www.milianke.com MLK_F3P

ProjectName:	<Doc>		
Size: A3	Page Title: <Title>	Rev:	<RevCode>
Date: Monday, May 26, 2025		Sheet 11 of 17	

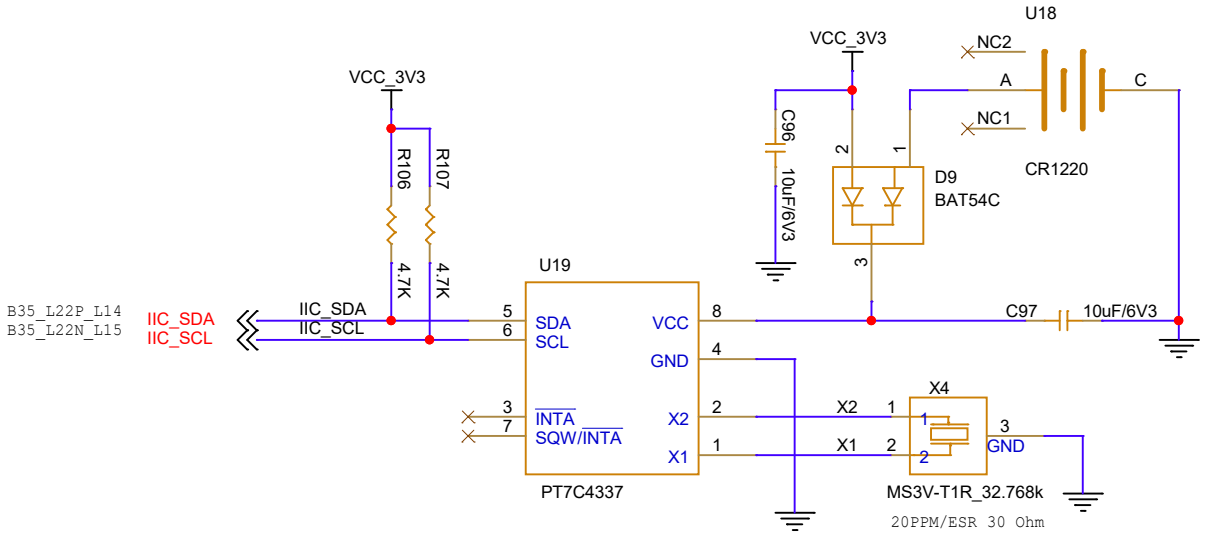

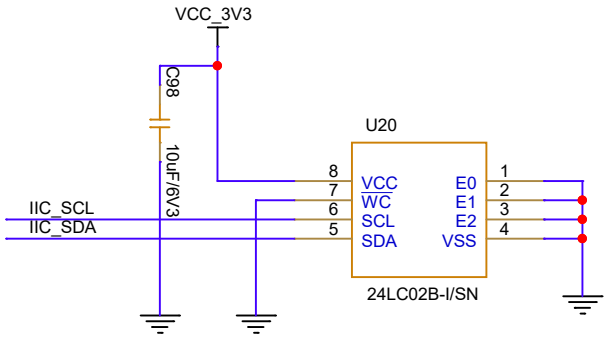

米联客 MiLianKe

www.milianke.com MLK_F3P

ProjectName: <Doc>			
Size: A4	Page Title: <Title>	Rev:	<RevCode>
Date: Monday, May 26, 2025		Sheet 12 of 17	

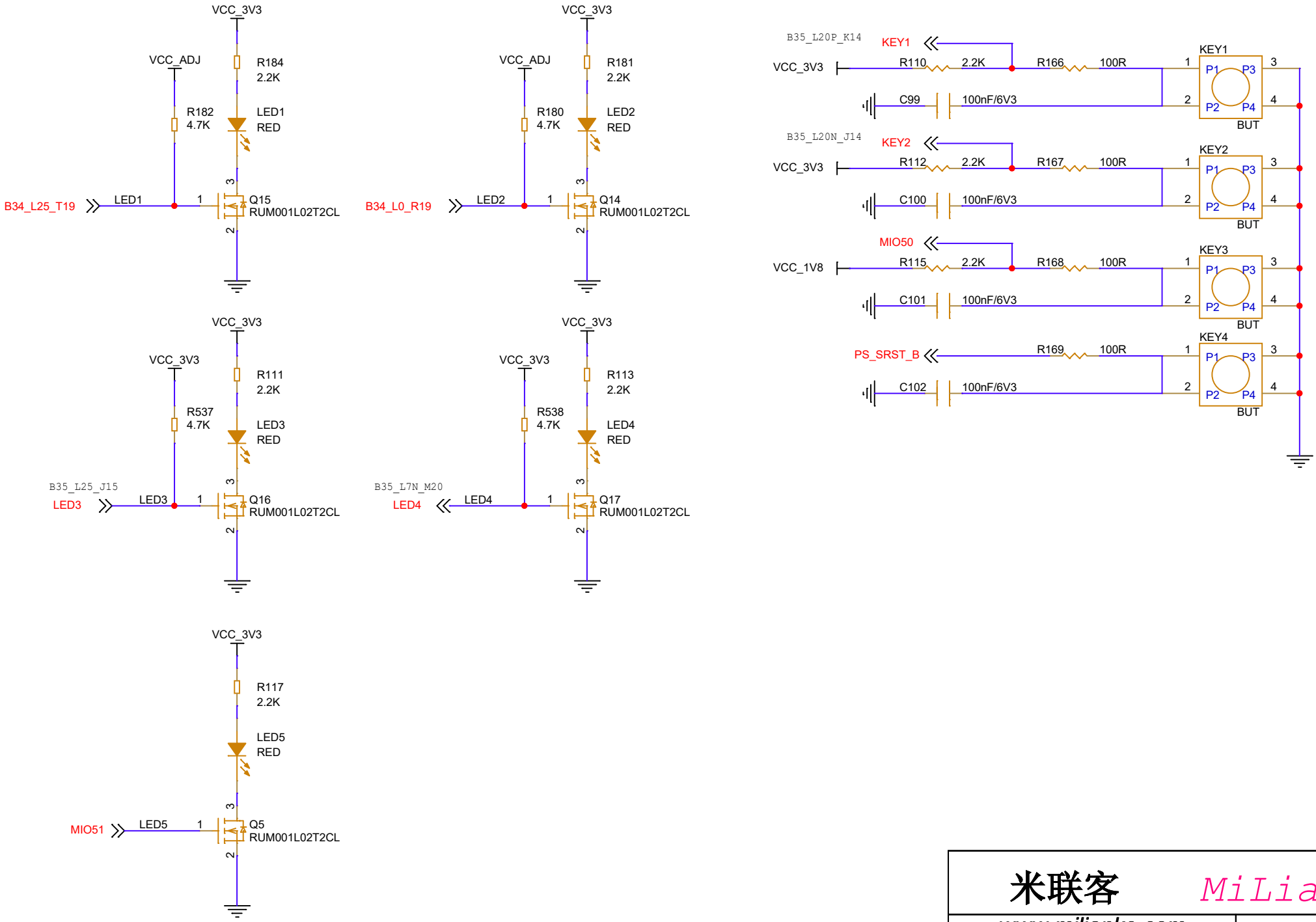

米联客 MiLianKe

www.milianke.com MLK_F3P

ProjectName: <Doc>			
Size: A4	Page Title: <Title>	Rev:	<RevCode>
Date: Monday, May 26, 2025		Sheet 13 of 17	

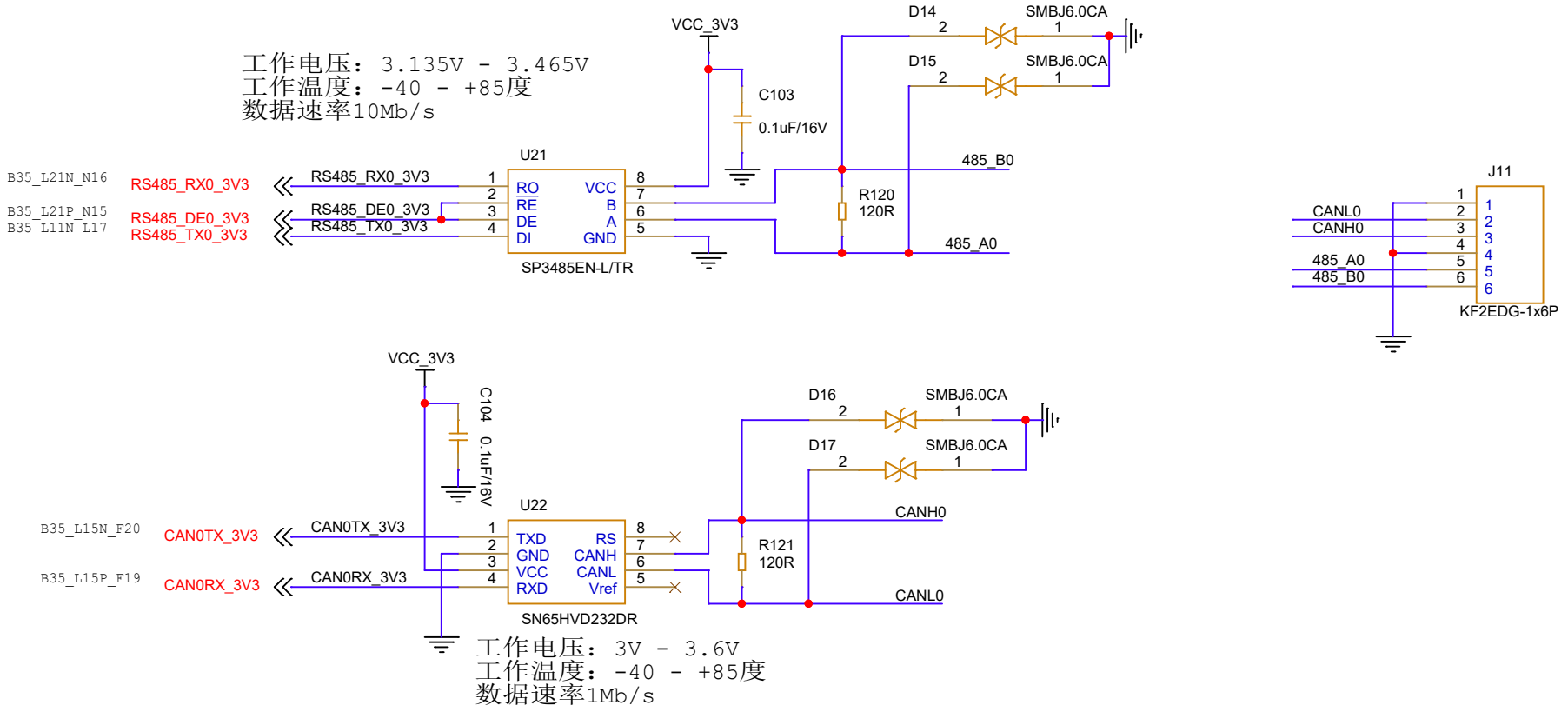

米联客 MiLianKe

www.milianke.com MLK_F3P

ProjectName: <Doc>			
Size: A4	Page Title: <Title>	Rev:	<RevCode>
Date: Monday, May 26, 2025		Sheet 14 of 17	

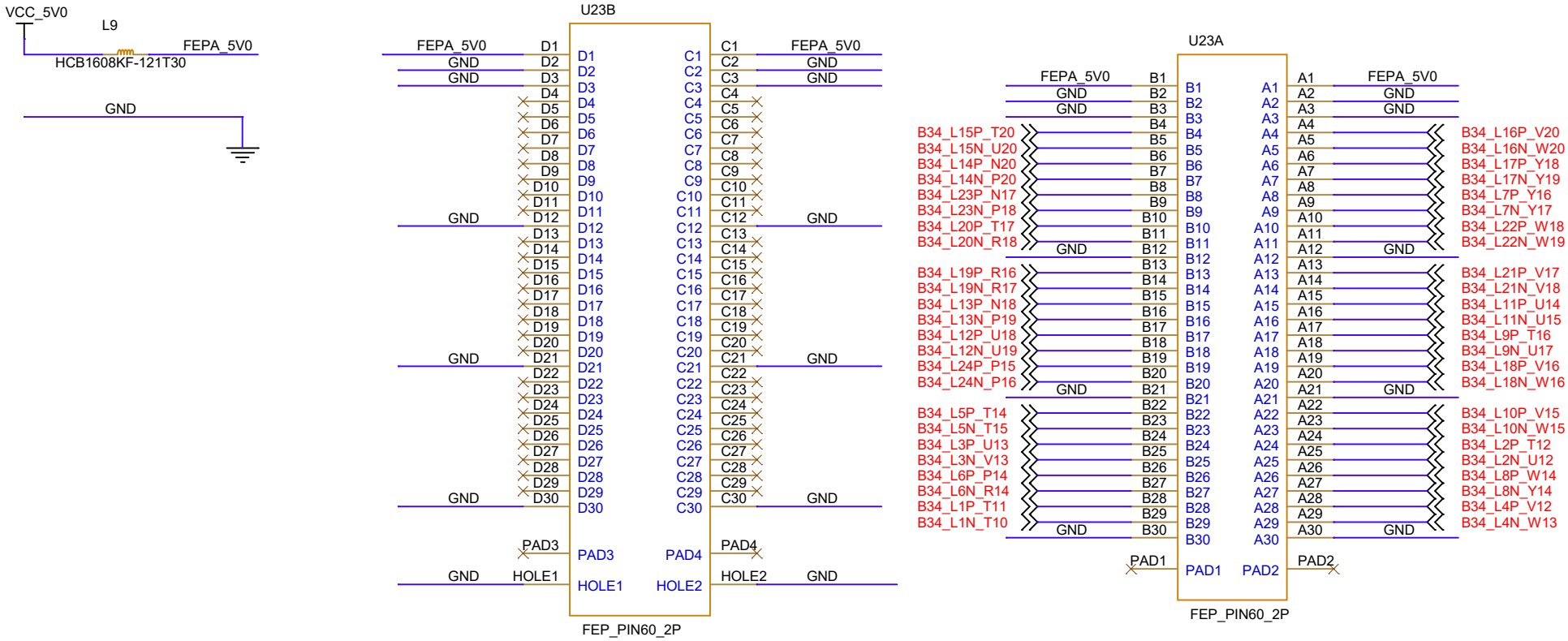

米联客 MiLianKe

www.milianke.com MLK_F3P

ProjectName: <Doc>			
Size: A4	Page Title: <Title>	Rev:	<RevCode>
Date: Monday, May 26, 2025		Sheet 15 of 17	

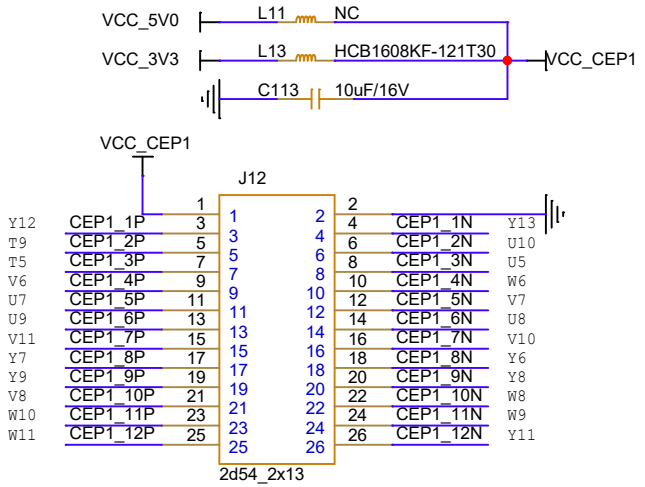

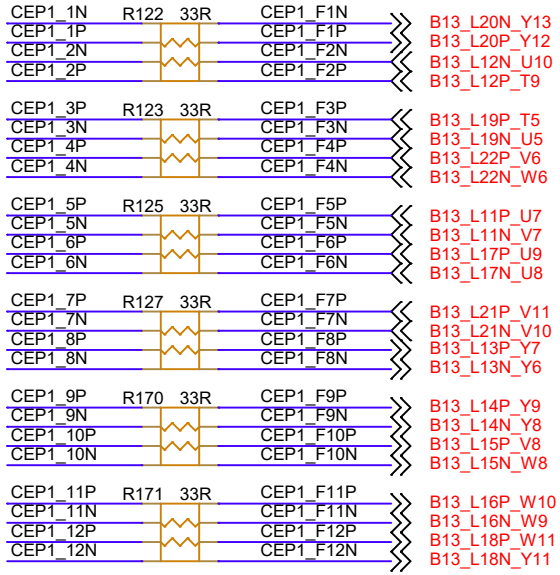

米联客 MiLianKe

www.milianke.com MLK_F3P

ProjectName: <Doc>			
Size: A4	Page Title: <Title>	Rev:	<RevCode>
Date: Monday, May 26, 2025		Sheet 16 of 17	

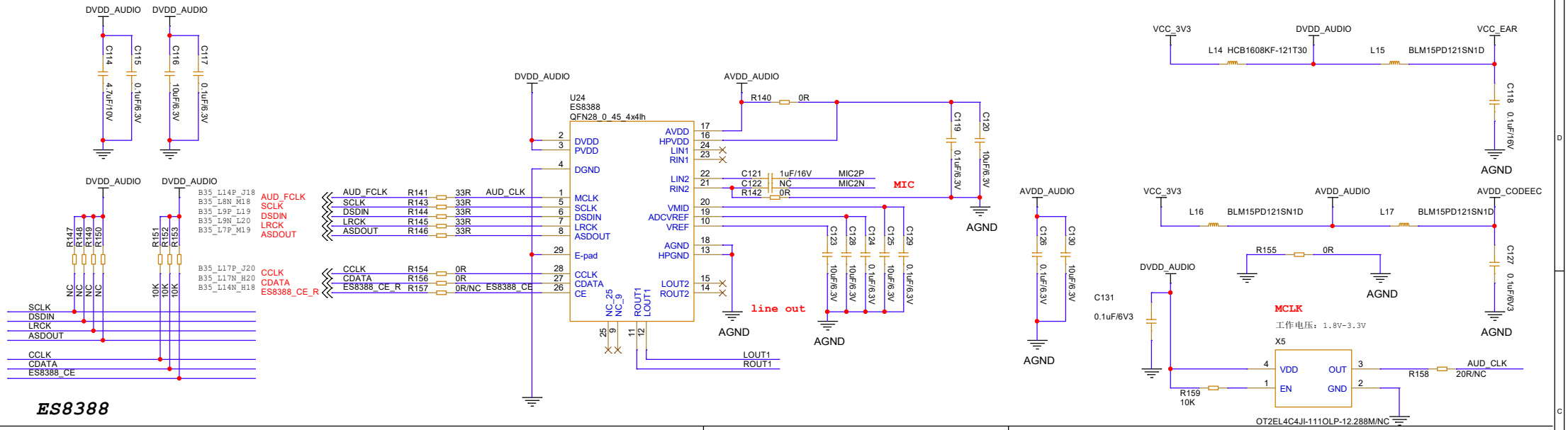

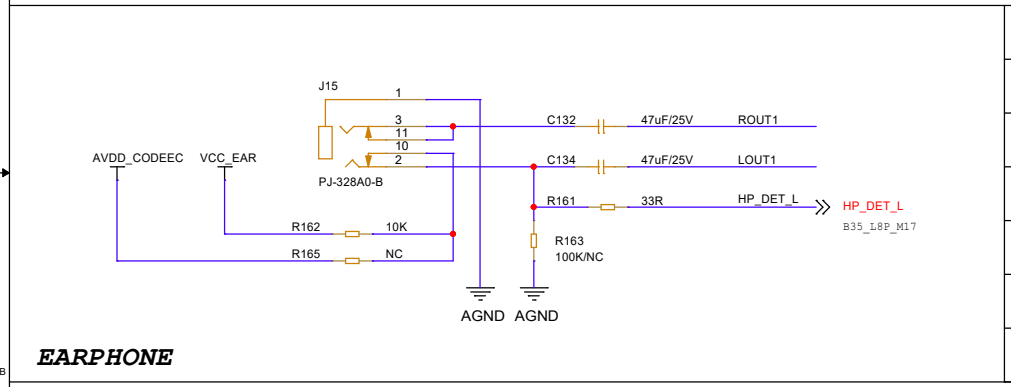

PIN	FUNCTION
1	sleeve
3	ring
11	ring switch
10	tip switch
2	tip

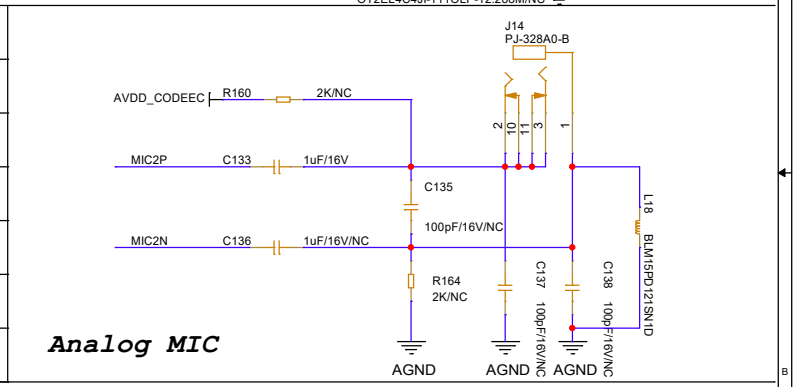

米联客 MiLianKe

www.milianke.com MLK_F3P

ProjectName: <Doc>			
Size: A3	Page Title: <Title>	Rev:	<RevCode>
Date: Monday, May 26, 2025		Sheet 17	of 17